RESTRAINT SYSTEM

SECTION RS

CONTENTS

PRECAUTION 2
Supplemental Restraint System (SRS) "AIR BAG" (Dual Air Bag System) 2
Supplemental Restraint System (SRS) "AIR BAG" (Single Air Bag System) 2
SEAT BELTS 3
Front Seat Belt 3
Rear Seat Belt 5
SUPPLEMENTAL RESTRAINT SYSTEM (SRS) 8
Precautions for SRS "Air Bag" and "Seat Belt Pre-tensioner" Service 8
Special Service Tools 8
Description 9
SRS Component Parts Location 10
Maintenance Items 11
Removal and Installation — Diagnosis Sensor Unit 12
Removal and Installation — Seat Belt Pre-tensioner (Mechanical Type) 13
Removal and Installation — Air Bag Module and Spiral Cable (Dual Air Bag System) 14
Removal and Installation — Air Bag Module and Spiral Cable (Single Air Bag System) 14
Removal — Air Bag Module and Spiral Cable 15
Removal — Front Passenger Air Bag Module (Dual Air Bag System) 16
Installation — Air Bag Module and Spiral Cable 17
Installation — Front Passenger Air Bag Module (Dual Air Bag System) 18
Disposal of Air Bag Module and Seat Belt Pre-tensioner 19
TROUBLE DIAGNOSES — Supplemental Restraint System (SRS) 25
How to Perform Trouble Diagnoses for Quick and Accurate Repair 25
TROUBLE DIAGNOSES — Supplemental Restraint System (SRS) — Dual Air Bag System 28
Schematic 28
Wiring Diagram — SRS — 29
Self-diagnosis 32
Trouble Diagnoses for Air Bag Warning Lamp 38
COLLISION DIAGNOSIS — Dual Air Bag System 40
TROUBLE DIAGNOSES — Supplemental Restraint System (SRS) — Single Air Bag System 41
Schematic 41
Wiring Diagram — SRS — 42
Self-diagnosis 43
COLLISION DIAGNOSIS — Single Air Bag System 45
COLLISION DIAGNOSIS — Seat Belt Pre-tensioner 46

RS

When you read wiring diagrams:
- **Read GI section, "HOW TO READ WIRING DIAGRAMS".**
- **See EL section, "POWER SUPPLY ROUTING" for power distribution circuit.**

When you perform trouble diagnoses, read GI section, "HOW TO FOLLOW FLOW CHART IN TROUBLE DIAGNOSES" and "HOW TO PERFORM EFFICIENT DIAGNOSIS FOR AN ELECTRICAL INCIDENT".

Supplemental Restraint System (SRS) "AIR BAG" (Dual Air Bag System)

The Supplemental Restraint System "Air Bag", used along with a seat belt, helps to reduce the risk or severity of injury to the driver and front passenger in a frontal collision. The Supplemental Restraint System consists of air bag modules (located in the center of the steering wheel and on the instrument panel on the passenger side), a diagnosis sensor unit, warning lamp, wiring harness and spiral cable.

WARNING:

- **To avoid rendering the SRS inoperative, which could increase the risk of personal injury or death in the event of a collision which would result in air bag inflation, all maintenance must be performed by an authorized NISSAN dealer.**
- **Improper maintenance, including incorrect removal and installation of the SRS, can lead to personal injury caused by unintentional activation of the system.**
- **Do not use electrical test equipment on any circuit related to the SRS unless instructed to in this Service Manual. SRS wiring harnesses are covered with yellow insulation either just before the harness connectors or for the complete harness, for easy identification.**

Supplemental Restraint System (SRS) "AIR BAG" (Single Air Bag System)

The Supplemental Restraint System "Air Bag", used along with a seat belt, helps to reduce the risk or severity of injury to the driver in a frontal collision. The Supplemental Restraint System consists of an air bag module (located in the center of the steering wheel), a diagnosis sensor unit, warning lamp, wiring harness and spiral cable.

WARNING:

- **To avoid rendering the SRS inoperative, which could increase the risk of personal injury or death in the event of a collision which would result in air bag inflation, all maintenance must be performed by an authorized NISSAN dealer.**
- **Improper maintenance, including incorrect removal and installation of the SRS, can lead to personal injury caused by unintentional activation of the system.**
- **Do not use electrical test equipment on any circuit related to the SRS unless instructed to in this Service Manual.**

CAUTION:

- **For vehicles equipped with seat belt pre-tensioner, refer to "Removal and Installation — Seat Belt Pre-tensioner (Mechanical Type)" when removing seat belt. Refer to RS-13 for details.**
- **Do not disassemble buckle or seat belt assembly.**
- **Replace anchor bolts if they are deformed or worn out.**
- **Never oil tongue and buckle.**
- **If any component of seat belt assembly is questionable, do not repair. Replace the whole seat belt assembly.**
- **If webbing is cut, frayed, or damaged, replace seat belt assembly.**
- **When replacing seat belt assembly, use a genuine seat belt assembly.**
- **After any collision, inspect all seat belt assemblies, including retractors and other attached hardwares (i.e., guide rail set).**

Front Seat Belt

4-DOOR SEDAN AND 5-DOOR HATCHBACK

CAUTION:

Before removing seat belt pre-tensioner assembly, be sure to lock safety lever to make seat belt pre-tensioner inoperative. Do not unlock safety lever before reinstalling seat belt pre-tensioner assembly.

① Remove front seat. Refer to "SEAT" in BT section for details.
② Remove floor anchor bolt.
③ Remove adjuster cover.
④ Remove shoulder anchor bolt.
⑤ Remove center pillar upper and lower garnishes. Refer to "INTERIOR TRIM" in BT section for details.
⑥ Remove second sash guide.
⑦ Remove the bolt securing seat belt pre-tensioner retractor, then remove seat belt and seat belt pre-tensioner retractor.
⑧ Remove the bolts securing seat belt adjuster, then remove seat belt adjuster.

SEC. 769•868

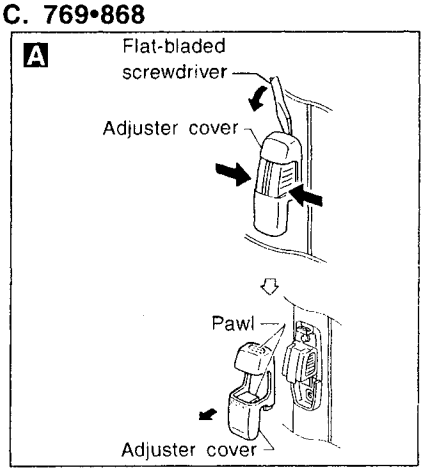

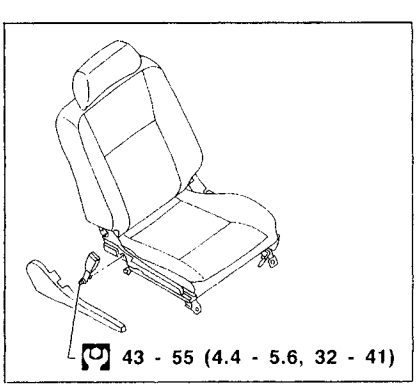

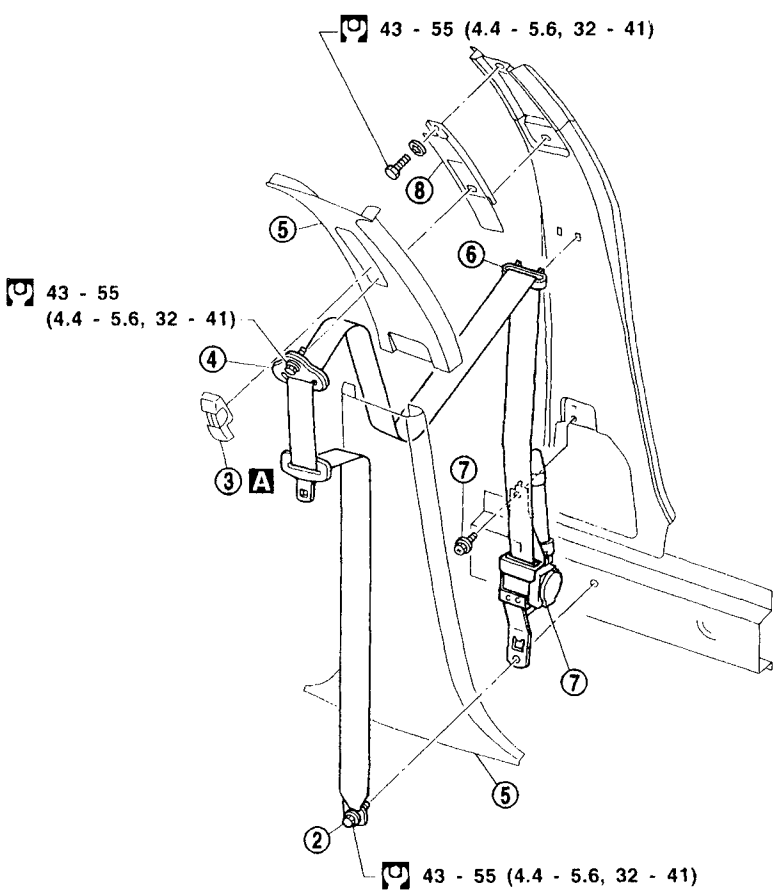

: N•m (kg-m, ft-lb)

MRS107A

Front Seat Belt (Cont'd)

3-DOOR HATCHBACK

CAUTION:

Before removing seat belt pre-tensioner assembly, be sure to lock safety lever to make seat belt pre-tensioner inoperative. Do not unlock safety lever before reinstalling seat belt pre-tensioner assembly.

① Remove front and rear seats. Refer to "SEAT" in BT section for details.
② Remove floor anchor bolts.
③ Remove shoulder cover.
④ Remove shoulder anchor bolt.
⑤ Remove rear side lower garnish. Refer to "INTERIOR TRIM" in BT section for details.
⑥ Remove the bolts securing second sash guide.
⑦ Remove the bolts securing seat belt pre-tensioner retractor, then remove seat belt and seat belt pre-tensioner retractor.

SEC. 769•868

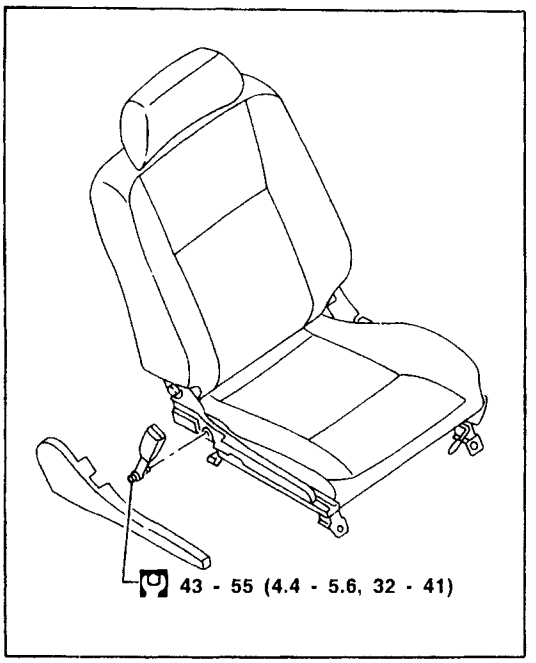

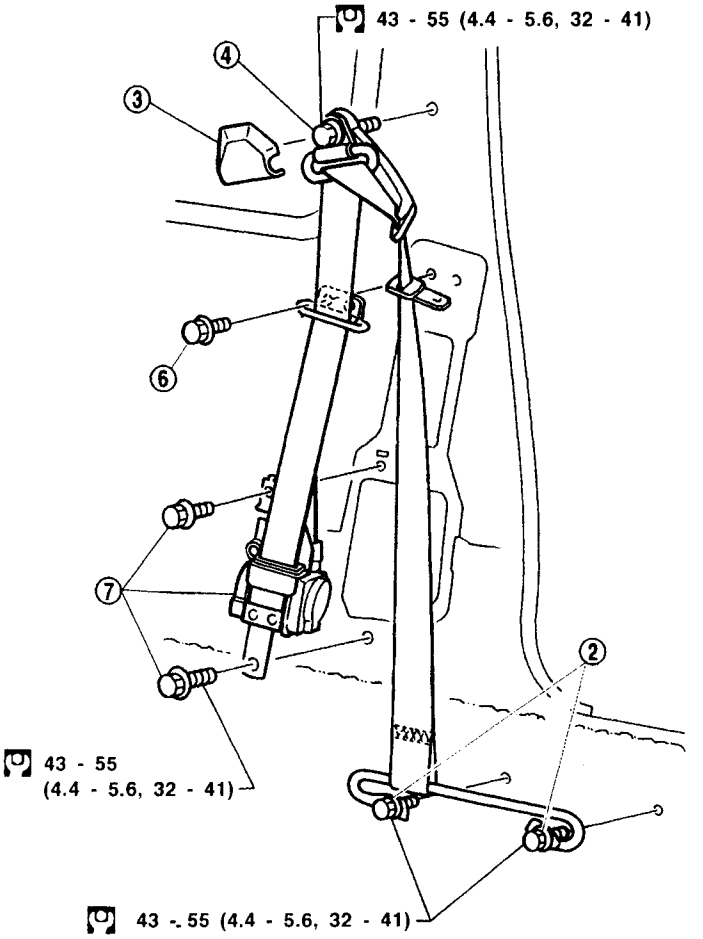

: N•m (kg-m, ft-lb)

MRS108A

Rear Seat Belt

4-DOOR SEDAN

① Remove rear seat. Refer to "SEAT" in BT section for details.
② Remove rear pillar garnish and rear parcel shelf finisher. Refer to "INTERIOR TRIM" in BT section for details.
③ Remove trunk room trim. Refer to "INTERIOR TRIM" in BT section for details.
④ Remove each anchor bolt.
⑤ Remove the bolt securing rear seat belt retractor, then remove seat belt retractor.

SEC. 869

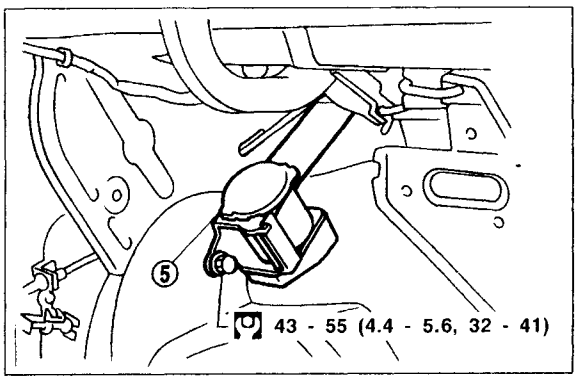

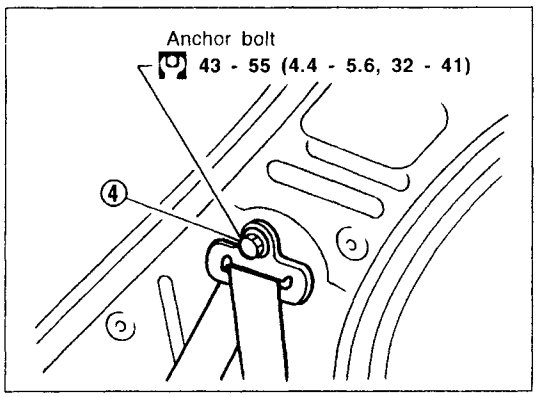

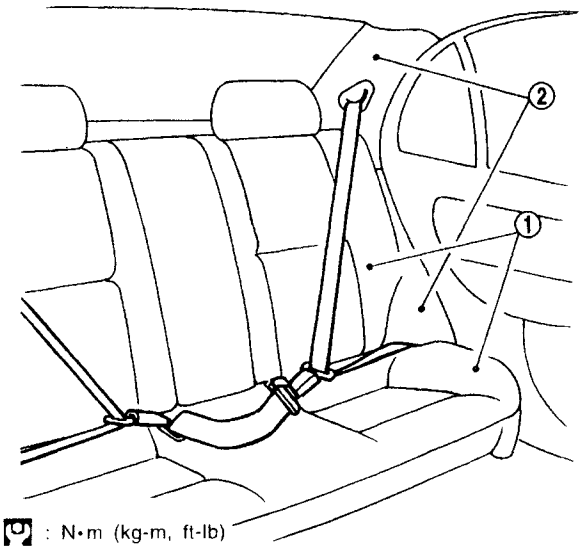

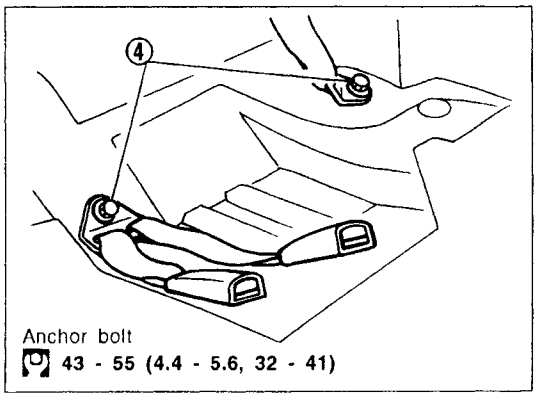

: N•m (kg-m, ft-lb)

MRS109A

RS

Rear Seat Belt (Cont'd)

3-DOOR HATCHBACK

- Before removing seat belt, open back door and remove tonneau board.

① Remove rear seat. Refer to "SEAT" in BT section for details.
② Remove rear parcel shelf side escutcheon and luggage side lower finisher. Refer to "INTERIOR TRIM" in BT section for details.
③ Remove shoulder anchor cover.
④ Remove each anchor bolt.
⑤ Remove the bolt securing rear seat belt retractor, then remove seat belt retractor.

SEC. 869

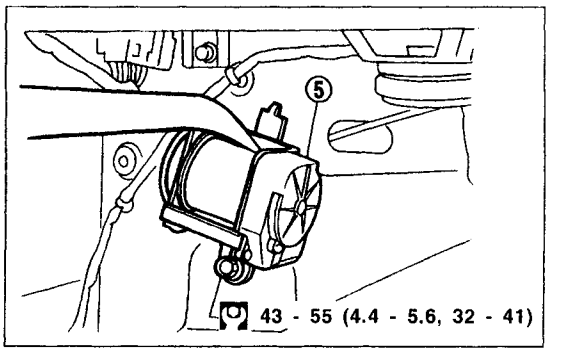

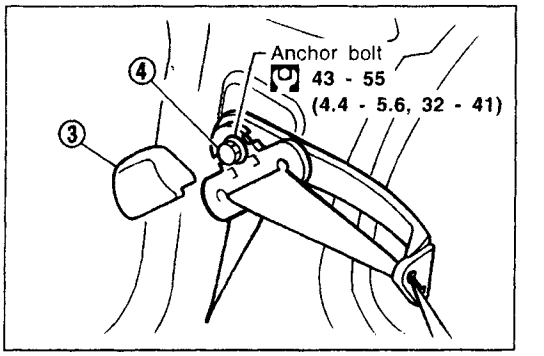

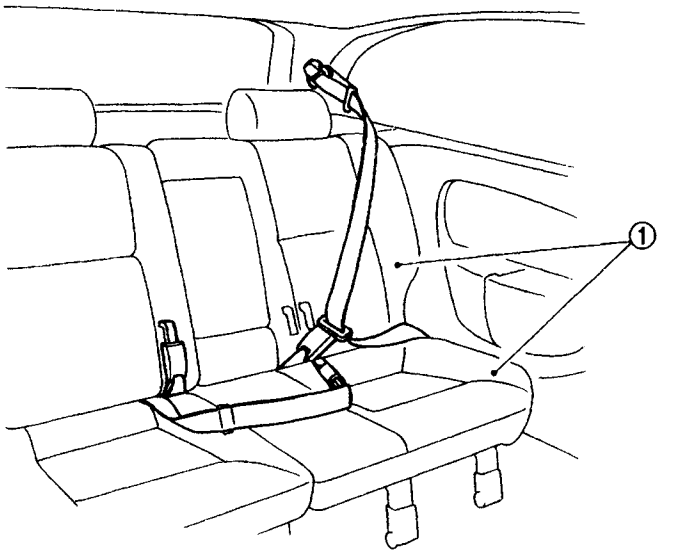

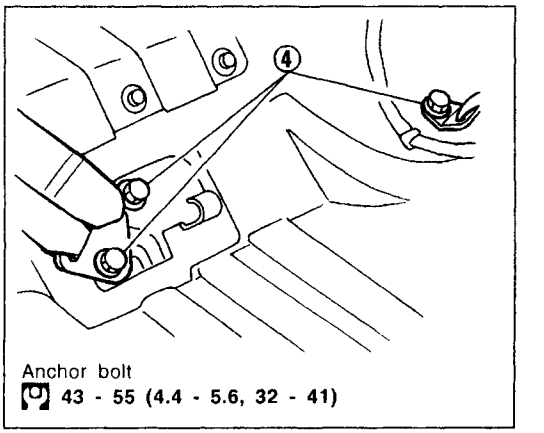

: N•m (kg-m, ft-lb)

MRS110A

Rear Seat Belt (Cont'd)

5-DOOR HATCHBACK

- Before removing seat belt, open back door and remove tonneau board.

① Remove rear seat. Refer to "SEAT" in BT section for details.
② Remove rear parcel shelf side finisher and luggage side lower finisher. Refer to "INTERIOR TRIM" in BT section for details.
③ Remove shoulder anchor cover.
④ Remove each anchor bolt.
⑤ Remove the bolt securing rear seat belt retractor, then remove seat belt retractor.

SEC. 869

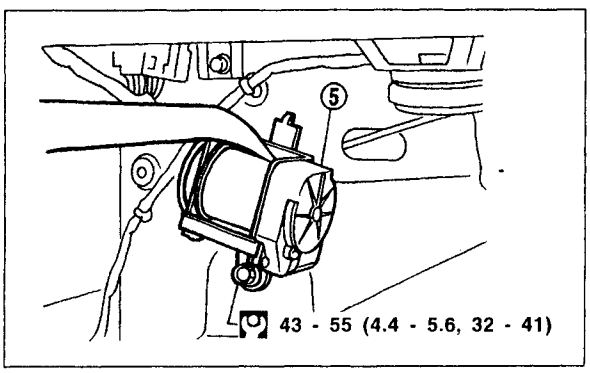

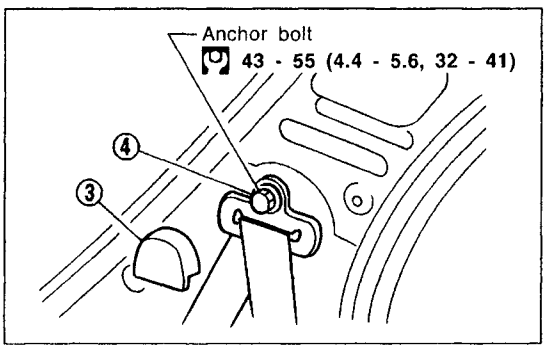

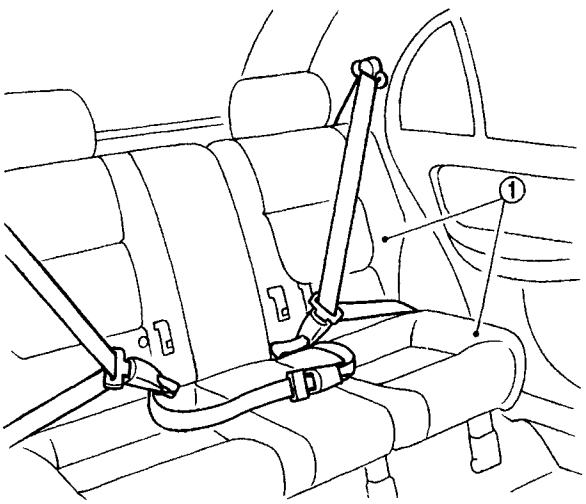

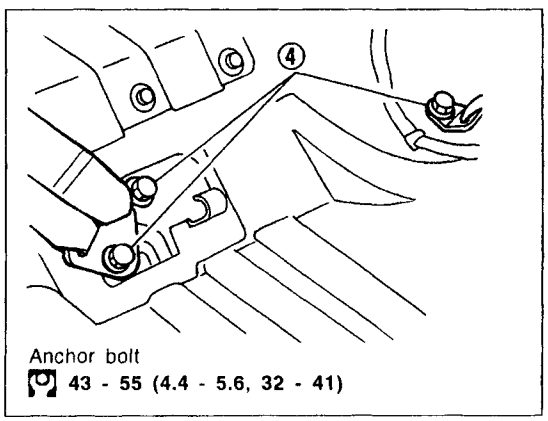

: N•m (kg-m, ft-lb)

MRS111A

RS

Precautions for SRS "Air Bag" and "Seat Belt Pre-tensioner" Service

- Do not use a circuit tester to check SRS circuits.
- Before servicing the SRS, turn ignition switch "OFF", disconnect both battery cables and wait for at least 10 minutes.
  For approximately 10 minutes after the cables are removed, it is still possible for the air bag to deploy. Therefore, do not work on any SRS connectors or wires until at least 10 minutes have passed.
- For single air bag system, do not separate diagnosis sensor unit from steering wheel.
- For dual air bag system, diagnosis sensor unit must always be installed with their arrow marks "⇦" pointing towards the front of the vehicle for proper operation. Also check diagnosis sensor unit for cracks, deformities or rust before installation and replace as required.
- The spiral cable must be aligned with the neutral position since its rotations are limited. Do not attempt to turn steering wheel or column after removal of steering gear.
- Handle air bag module carefully. Always place it with the pad side facing upward.
- Do not use old bolts after removing any SRS parts; replace with new ones. Conduct self-diagnosis to check entire SRS for proper function.
- For dual air bag system, instrument panel assembly should be replaced after air bag inflates.

Special Service Tools

Tool number Tool name	Description	Application		
		Seat belt pre-tensioner*2	Dual Air Bag System	Single Air Bag System
KV991072S0 Air bag deployment kit KV99106400 Deployment tool	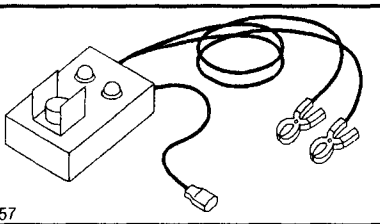 NT357 Disposing of air bag module	—	X	X
KV991065S0 Deployment tool adapters	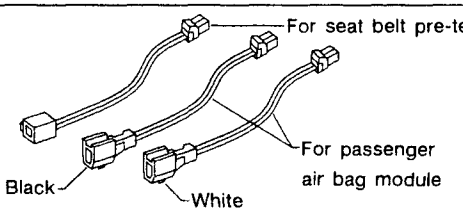 NT353	—	X	—
KV99105300 Passenger air bag bracket	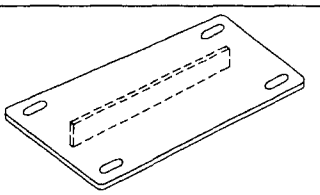 NT354 Anchor the passenger air bag module	—	X	—
HT61961000 and HT62152000 combined *1 Special torx bit	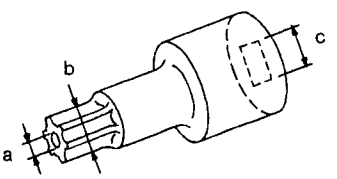 NT361 Use for special bolts [TAMPER RESISTANT TORX (Size T50)] **a: 3.5 (0.138) dia.** **b: 8.5 - 8.6 (0.335 - 0.339) dia.** **c: approx. 10 (0.39) sq.** Unit: mm (in)	—	X	X

*1: Special tool or commercial equivalent
*2: Tools are not applicable because of its mechanical type.

Description

The air bag deploys if the diagnosis sensor unit activates while the ignition switch is in the "ON" or "START" position.

Single and dual air bag systems

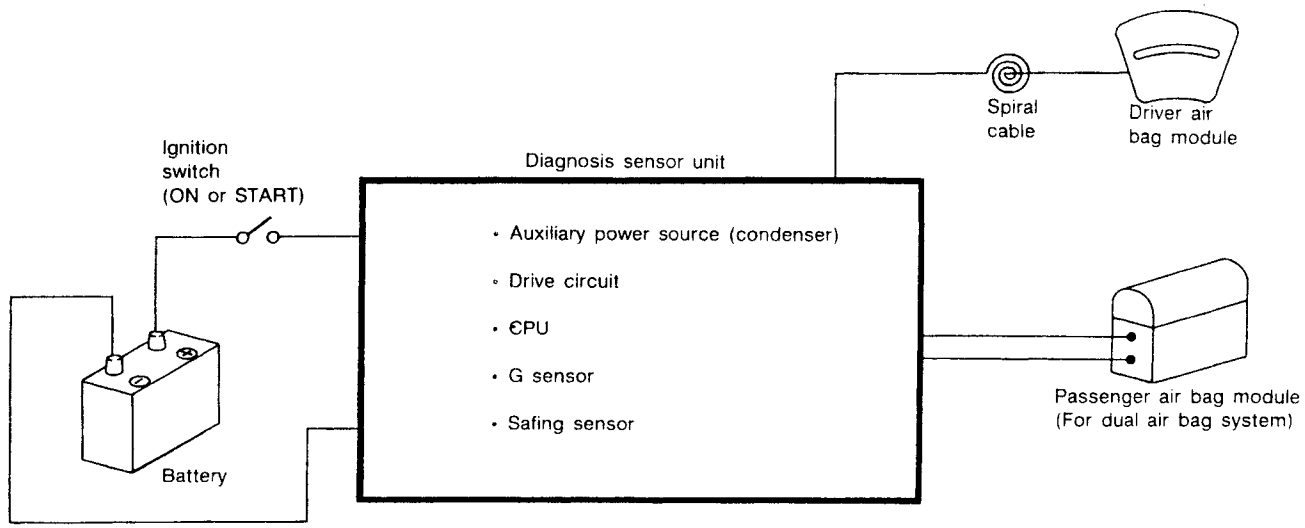

MRS069AB

Seat belt pre-tensioner

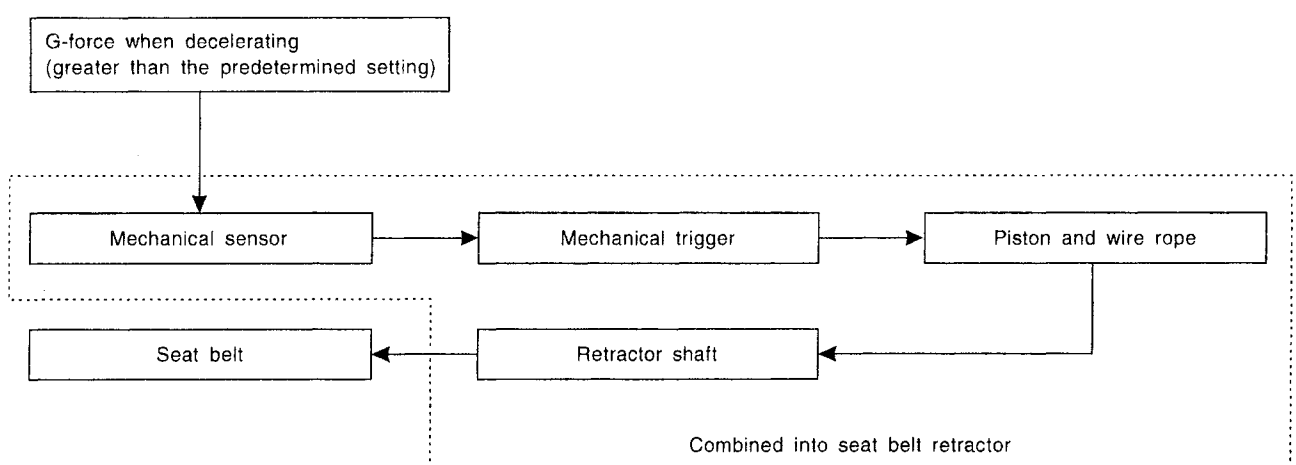

SRS126

RS

SRS Component Parts Location

Dual air bag system and seat belt pre-tensioner
SEC. 251•253•484•680•868

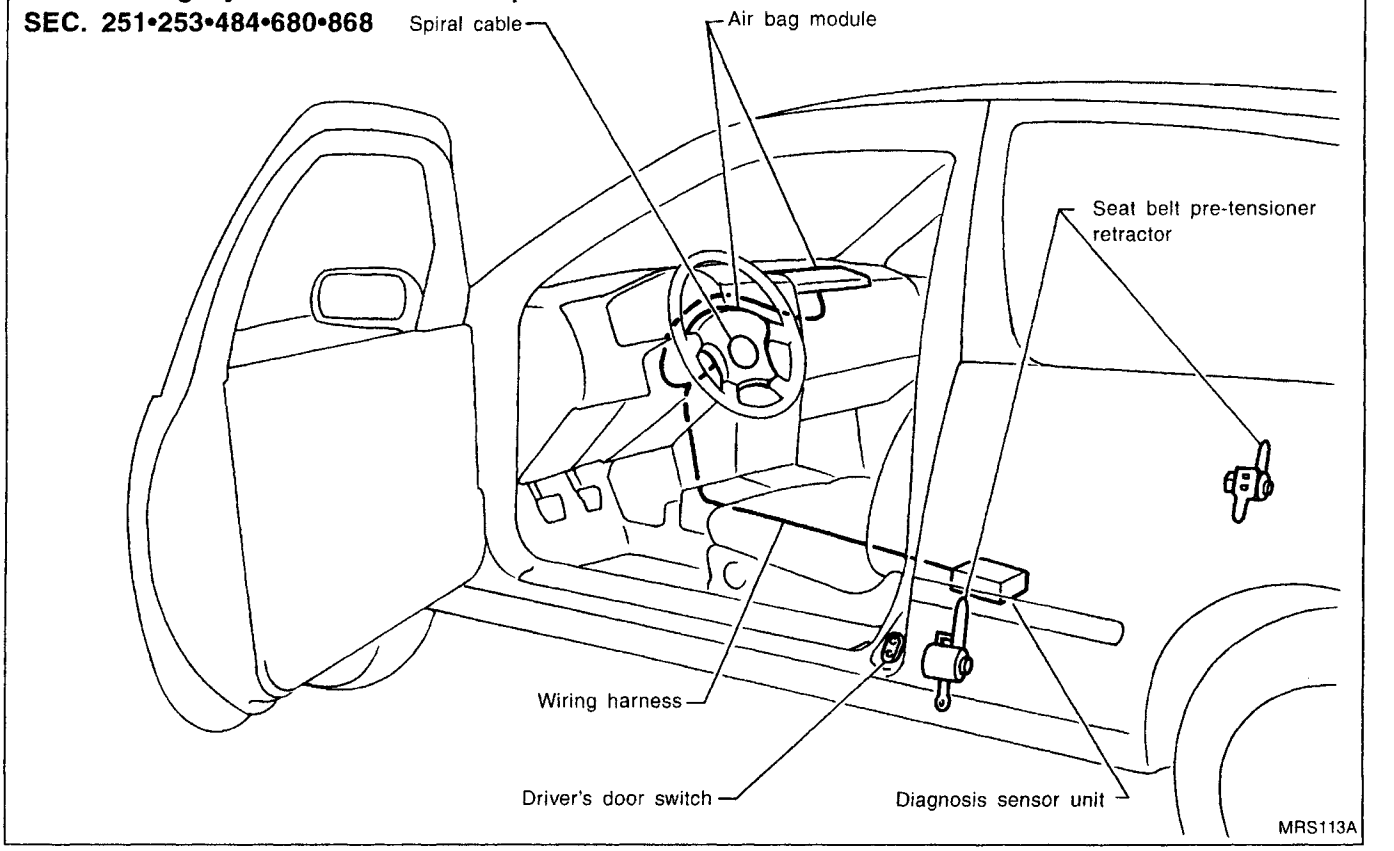

Single air bag system and seat belt pre-tensioner
SEC. 253•484•868

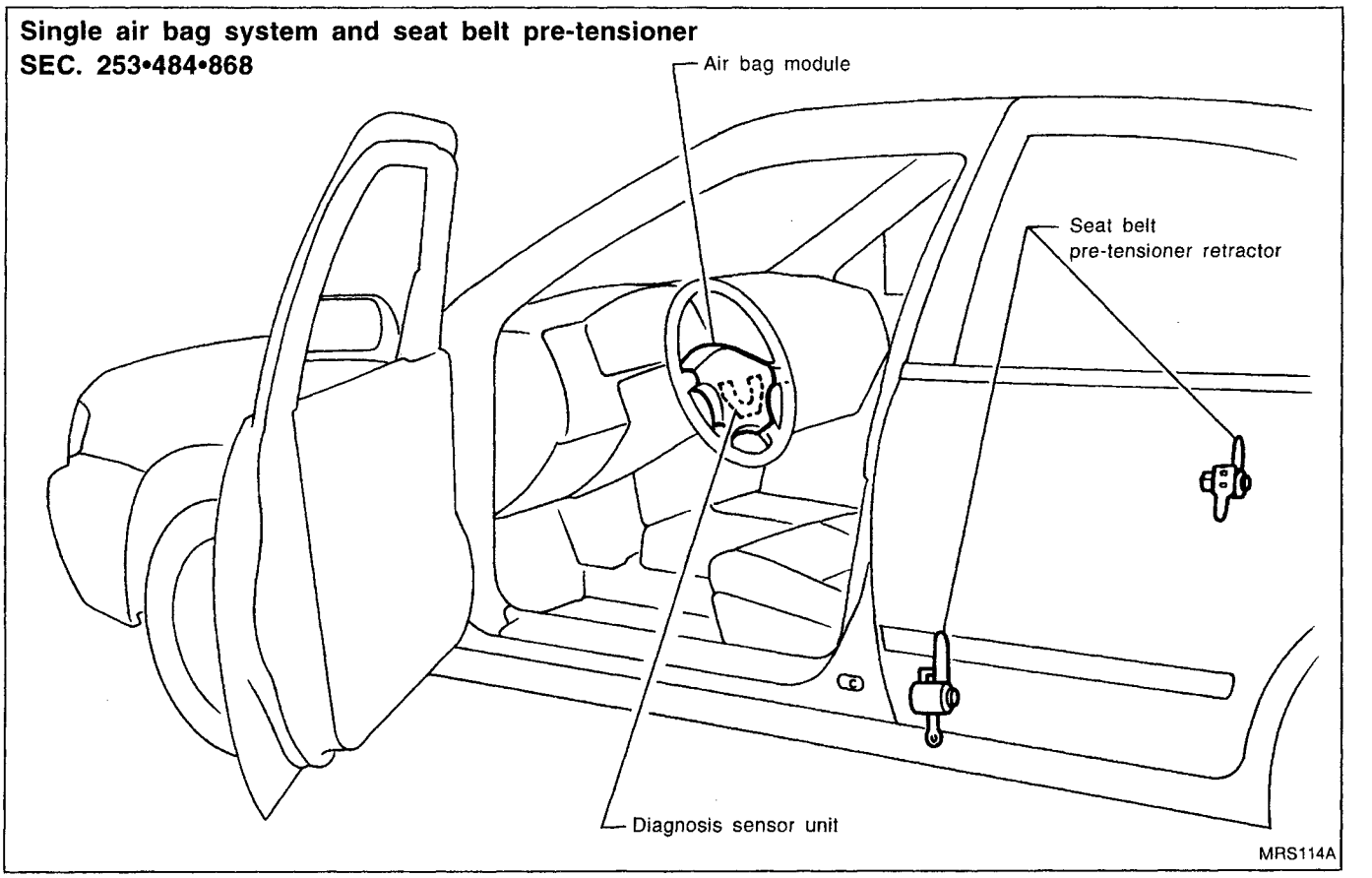

Maintenance Items

1. Check "AIR BAG" warning lamp operation
   After turning ignition key to "ON" position, "AIR BAG" warning lamp illuminates. The "AIR BAG" warning lamp will turn off after about 7 seconds if no malfunction is detected.
   If any of the following air bag warning lamp conditions occur, immediately check the air bag system. Refer to RS-32 and 43 for details.

- The warning lamp does not illuminate when the ignition switch is turned "ON".
- The warning lamp does not turn off about 7 seconds after the ignition switch is turned "ON".
- The warning lamp turns off about 7 seconds after the ignition switch is turned "ON", but it turns on or flashes again.

2. Visually check SRS components

(1) Diagnosis sensor unit
- Check diagnosis sensor unit and bracket for dents, cracks or deformities.
- Check connectors for damage, and terminals for deformities.

(2) Air bag module and steering wheel
- Remove air bag module from steering wheel or instrument panel. Check harness cover and connectors for damage, terminals for deformities, and harness for binding.
- Install driver side air bag module to steering wheel to check fit or alignment with the wheel.
- Check steering wheel for excessive free play.
- For dual air bag system, install passenger side air bag module to instrument panel to check fit or alignment with the instrument panel.

(3) Spiral cable
- Check spiral cable for dents, cracks, or deformities.
- Check connectors and protective tape for damage.
- Check steering wheel for noise, binding or heavy operation.

(4) Main harness and air bag harness (For dual air bag system only)
- Check connectors for poor connections, damage, and terminals for deformities.
- Check harnesses for binding, chafing or cut.

CAUTION:
Replace previously used screws with new ones.

Removal and Installation — Diagnosis Sensor Unit

CAUTION:

- **Before servicing SRS, turn the ignition switch off, disconnect both battery cables and wait for at least 10 minutes.**
- **The special bolts are coated with bonding agent while the other bolt is for ground. Do not use old bolts after removal; replace with new ones.**
- **For single air bag system, do not separate diagnosis sensor unit from steering wheel.**
- **For dual air bag system, check diagnosis sensor unit for proper installation.**
- **Check diagnosis sensor unit to ensure they are free of deformities, dents, cracks or rust. If they show any visible signs of damage, replace them with new ones.**
- **Check diagnosis sensor unit brackets to ensure they are free of deformities or rust.**
- **Always work from the side of air bag module.**
- **Replace diagnosis sensor unit if it has been dropped or sustained an impact.**

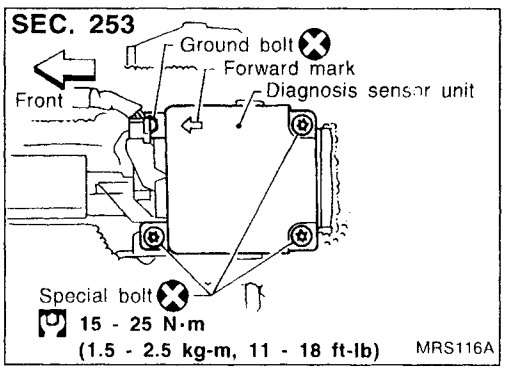

REMOVAL OF DIAGNOSIS SENSOR UNIT

1. Disconnect driver and passenger air bag module connectors. Also, disconnect seat belt pre-tensioner connector.
2. Remove console box. Refer to "INSTRUMENT PANEL" in BT section.
3. Disconnect diagnosis sensor unit connector.
4. Remove bolt and also remove special bolts using the TAMPER RESISTANT TORX (Size T50), from diagnosis sensor unit.
   Then remove the diagnosis sensor unit.

NOTE:

- **To install, reverse the removal procedure sequence.**
- **After replacement, perform self-diagnosis for SRS. Refer to "Self-diagnosis" for details (RS-32 and RS-43).**

Removal and Installation — Seat Belt Pre-tensioner (Mechanical Type)

CAUTION:

- **Do not attempt to disassemble seat belt pre-tensioner assembly.**
- **Do not drop or impact seat belt pre-tensioner assembly. This may cause seat belt pre-tensioner to deploy.**
- **Check seat belt pre-tensioner assembly for damage or deformities.**
- **Replace seat belt pre-tensioner assembly that shows any visible sign of damage.**
- **Do not expose seat belt pre-tensioner to temperatures exceeding 80°C (176°F).**

Seat belt pre-tensioner retracter
SEC. 868

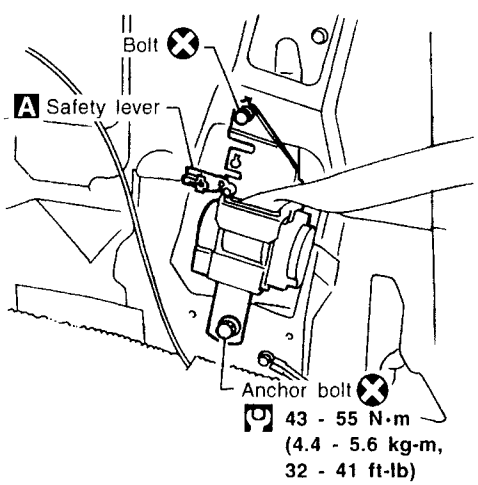

MRS117A

For removal of seat belt pre-tensioner, refer to "Front Seat Belt" for details (RS-3).

CAUTION:

- **Before removing seat belt pre-tensioner assembly, be sure to lock safety lever to make seat belt pre-tensioner inoperative. Do not unlock the safety lever before reinstalling seat belt pre-tensioner assembly.**
- **After removing, place seat belt pre-tensioner assembly in a box (such as a card board box) with the safety lever facing down.**
- **After reinstalling seat belt pre-tensioner assembly, release safety lever lock to make seat belt pre-tensioner operative.**
- **When installing new seat belt pre-tensioner assembly, pull clip out to release safety lever lock. Failure to pull clip out will result in it coming into contact with center pillar trim, thus hampering installation.**

NOTE:

- **To install, reverse the removal procedure sequence.**

A Safety lever position

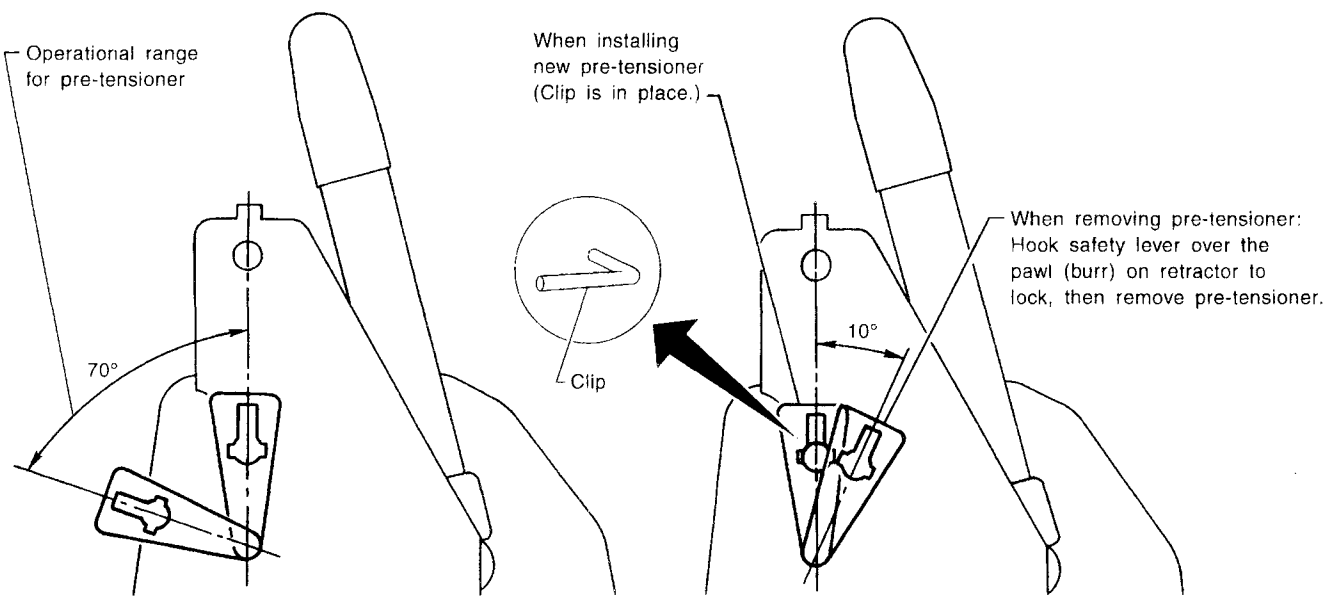

Seat belt pre-tensioner is operative. **Seat belt pre-tensioner is inoperative.** SRS125

RS

Removal and Installation — Air Bag Module and Spiral Cable (Dual Air Bag System)

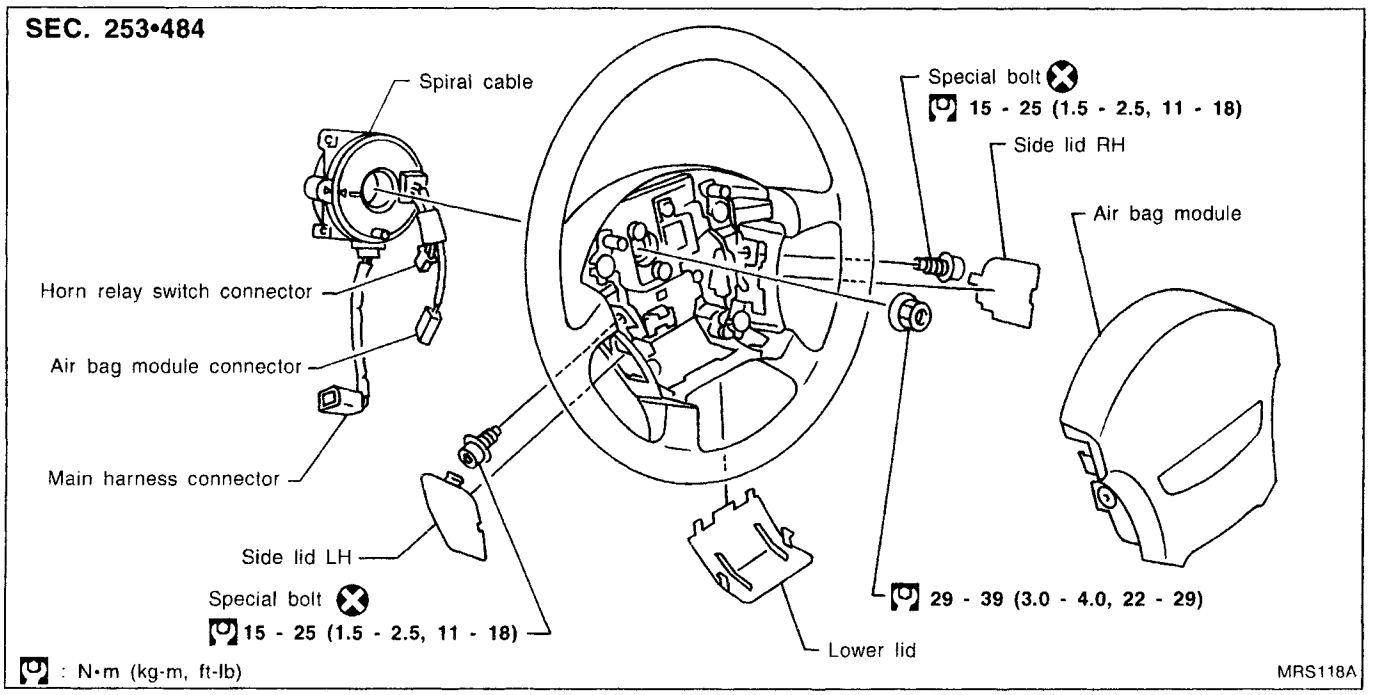

Removal and Installation — Air Bag Module and Spiral Cable (Single Air Bag System)

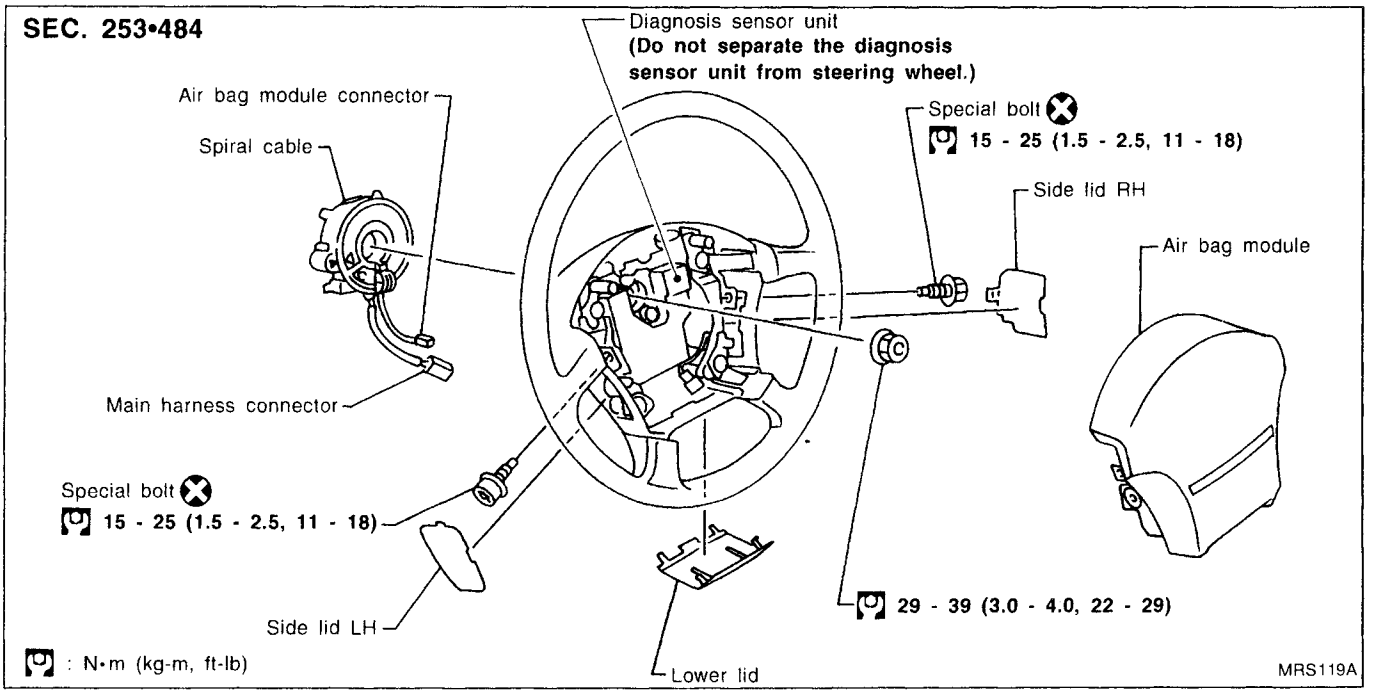

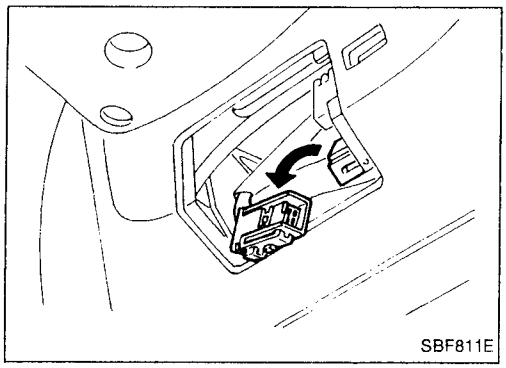
SBF811E

Removal — Air Bag Module and Spiral Cable

CAUTION:

- **Before servicing SRS, turn the ignition switch off, disconnect both battery cables and wait for at least 10 minutes.**
- **Always work from the side of air bag module.**

1. Remove lower lid from steering wheel, and disconnect air bag module connector.

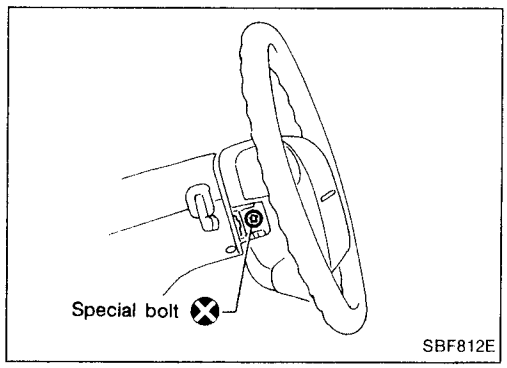

SBF812E

2. Remove side lids. Using the TAMPER RESISTANT TORX (Size T50), remove left and right special bolts. Air bag module can then be removed.

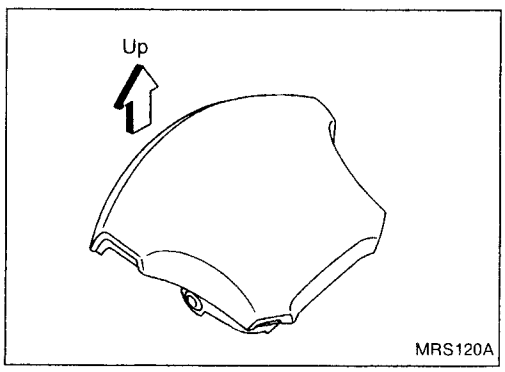

MRS120A

CAUTION:

- **Always place air bag module with pad side facing upward.**
- **Do not attempt to disassemble air bag module.**
- **The special bolts are coated with bonding agent. Do not use old bolts after removal; replace with new ones.**

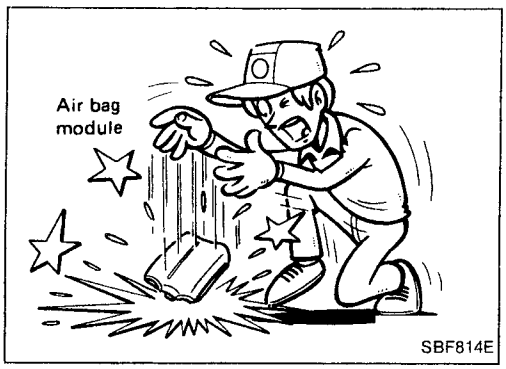

SBF814E

- **Replace air bag module if it has been dropped or sustained an impact.**
- **Do not expose the air bag module to temperatures exceeding 90°C (194°F).**
- **Do not allow oil, grease or water to come in contact with the air bag module.**

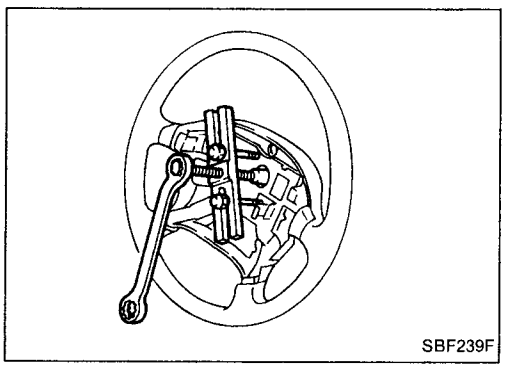
SBF239F

3. Set steering wheel in the neutral position.
4. Disconnect horn connector and remove nuts.
5. Using steering wheel puller, remove steering wheel. Be careful not to over-tighten puller bolt on steering wheel.

CAUTION:

- **Do not tap or bump the steering wheel.**

6. Remove steering column cover.
7. Disconnect connectors and remove the four screws. The spiral cable can then be removed.

CAUTION:

- **Do not attempt to disassemble spiral cable.**
- **Do not apply lubricant to the spiral cable.**

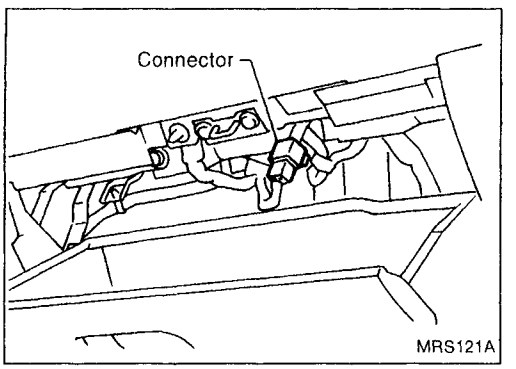

Removal — Front Passenger Air Bag Module (Dual Air Bag System)

CAUTION:

- **Before servicing SRS, turn the ignition switch off, disconnect both battery cables and wait for at least 10 minutes.**
- **Always work from the side of or under air bag module.**

1. Open the glove box lid.
2. Disconnect inflator connector from body harness air bag connector.
3. Remove glove box assembly. Refer to "INSTRUMENT PANEL" in BT section for details.

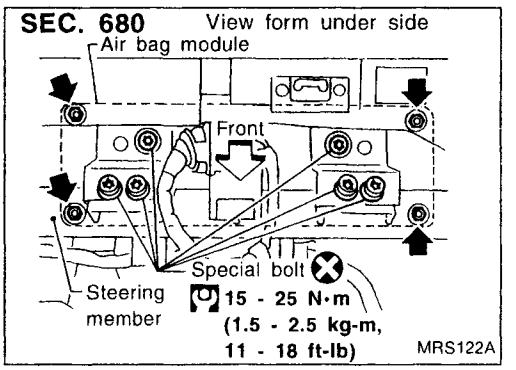

4. Remove the nuts and special bolts using the TAMPER RESISTANT TORX (Size T50) from front passenger air bag module.
   Take out the air bag module from the instrument panel.
   - The air bag module is heavy and should be supported using both hands during removal.

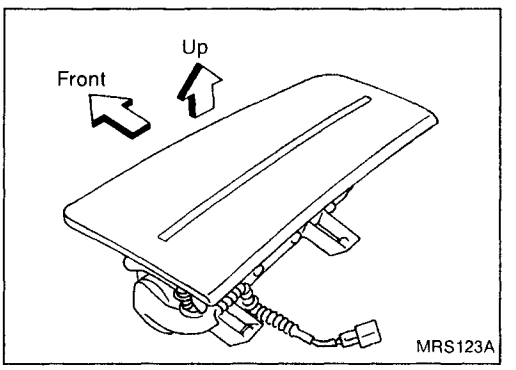

CAUTION:

- **Always place air bag module with pad side facing upward.**
- **Do not attempt to disassemble air bag module.**
- **The special bolts are coated with bonding agent. Do not use old bolts after removal; replace with new coated bolts.**
- **Do not insert foreign objects (screwdriver, etc.) into air bag module connector.**
- **Do not use a circuit tester to check the air bag module harness connector.**

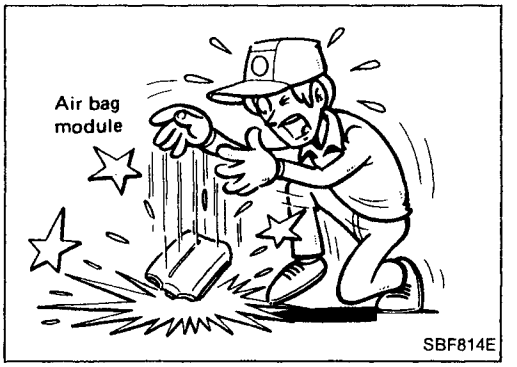

- **Replace air bag module if it has been dropped or sustained an impact.**
- **Do not expose the air bag module to temperatures exceeding 90°C (194°F).**
- **Do not allow oil, grease or water to come in contact with the air bag module.**

Dual air bag system

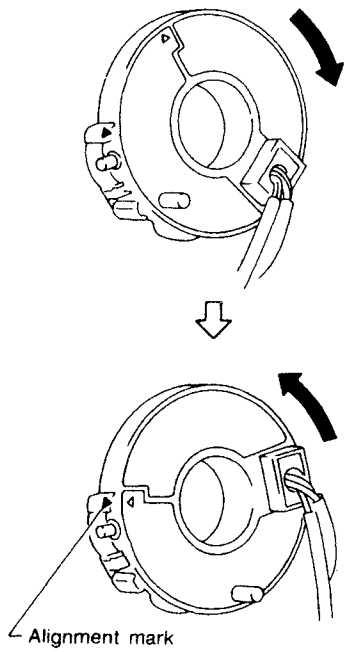

MRS074AA

Installation — Air Bag Module and Spiral Cable

1. Set the front wheels in the straight-ahead position.
2. Make sure that the spiral cable is in the neutral position. The neutral position is detected by turning left about 2.5 revolutions from the right end position. Align the two marks (⧗).

CAUTION:

- **The spiral cable may snap due to steering operation if the cable is installed in an improper position.**
  Also, with the steering linkage disconnected, the cable may snap by turning the steering wheel beyond the limited number of turns. (The spiral cable can be turned up to 2.5 turns from the neutral position to both the right and left.)
- **Always work from the side of air bag module.**

3. Connect spiral cable connector and tighten with screws. Install steering column cover.

Single air bag system

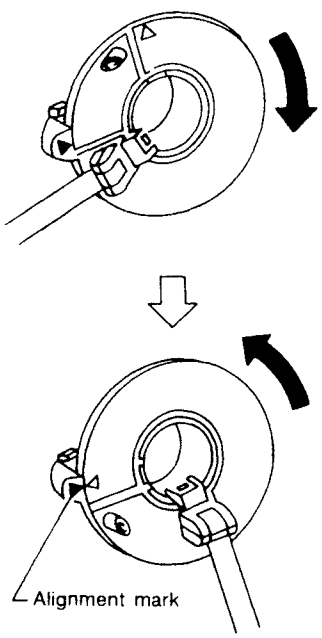

SRS037-A

Dual air bag system

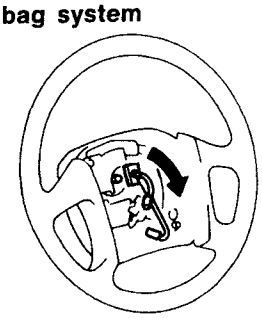

MRS075AA

4. Install steering wheel setting spiral cable pin guides, and pull spiral cable through.
5. Connect horn connector and engage spiral cable with pawls in steering wheel.
6. Tighten nut.
   [O]: 29 - 39 N·m (3.0 - 4.0 kg-m, 22 - 29 ft-lb)

RS

Installation — Air Bag Module and Spiral Cable (Cont'd)

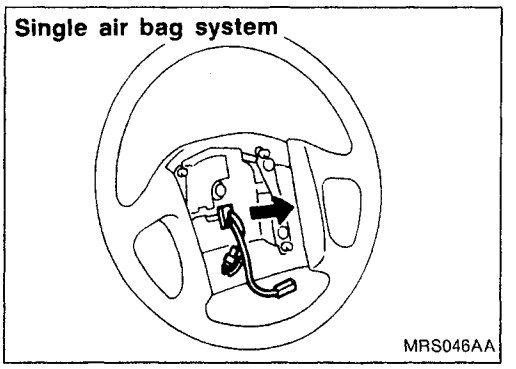

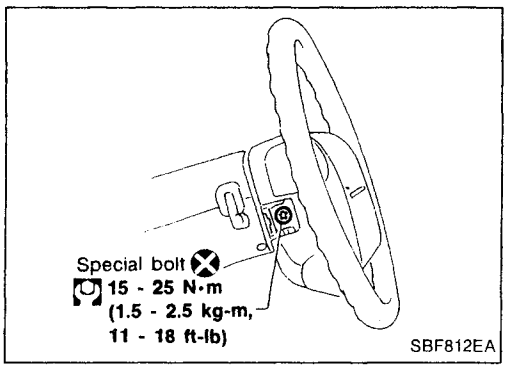

7. Position air bag module and tighten with new special bolts.
8. Connect air bag module connector.
9. Install all lids.
10. Conduct self-diagnosis to ensure entire SRS operates properly. (Use CONSULT or warning lamp check.)
    Before performing self-diagnosis, connect both battery cables.
11. Turn steering wheel to the left end and then to the right end fully to make sure that spiral cable is set in the neutral position.
    If air bag warning lamp blinks or stays ON (at the user mode), it shows the spiral cable may be snapped due to its improper position. Perform self-diagnosis again (use CONSULT or warning lamp). If a malfunction is detected, replace the spiral cable with a new one.

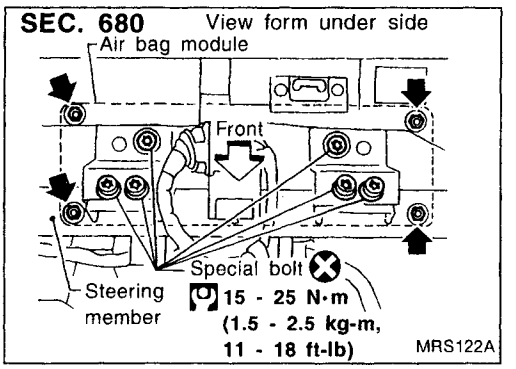

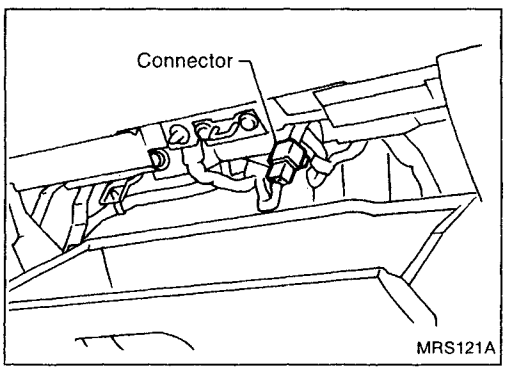

Installation — Front Passenger Air Bag Module (Dual Air Bag System)

- **Always work from the side of air bag module.**

1. Install front passenger air bag module on steering member.
- Ensure harness is not caught between rear of air bag module and steering member.
2. Install glove box assembly. (Glove box lid is open.)
3. Connect air bag module connector to body harness connector.
4. Close the glove box lid.

Disposal of Air Bag Module and Seat Belt Pre-tensioner

- Before disposing of air bag module and seat belt pre-tensioner, or vehicles equipped with such systems, deploy the systems. If such systems have already been deployed due to an accident, dispose of as indicated in "DISPOSING OF AIR BAG MODULE AND SEAT BELT PRE-TENSIONER" (RS-24).
- When deploying the air bag module, always use the Special Service Tool; Deployment tool KV99106400.
- When deploying the air bag module and seat belt pre-tensioner, stand at least 5 m (16 ft) away from the deployment component.
- Due to heat, leave air bag module unattended for more than 30 minutes after deployment. Also leave seat belt pre-tensioner unattended for more than 10 minutes after deployment.
- Be sure to wear gloves when handling a deployed air bag module and seat belt pre-tensioner.
- Never apply water to a deployed air bag module.
- Wash your hands clean after finishing work.
- Do not dispose of the air bag module and seat belt pre-tensioner un-deployed.

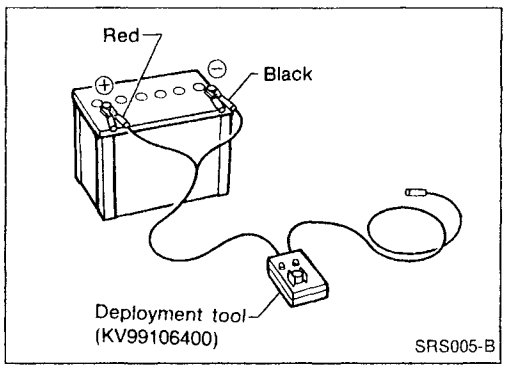

CHECKING DEPLOYMENT TOOL

Connecting to battery

- Place the vehicle outdoors with an open space of at least 6 m (20 ft) on all sides.
- Use a voltmeter to make sure the vehicle battery is fully charged.

CAUTION:

The battery must show voltage of 9.6V or more.

Remove the battery from the vehicle and place it on dry wood blocks approximately 5 m (16 ft) away from the vehicle.

- Wait 10 to 12 minutes after the vehicle battery is disconnected before proceeding.
- Connect red clip of deployment tool to battery positive terminal and black clip to negative terminal.

Make sure the polarity is correct. The right side lamp in the tool, marked "deployment tool power", should glow with a green light. If the right side lamp glows red, reverse the connections to the battery.

RS

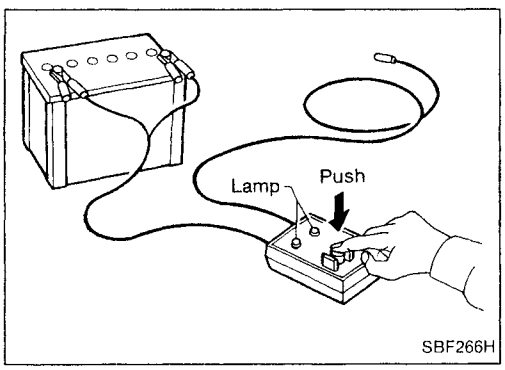

Deployment tool check

Press the deployment tool switch to the "ON" position. The left side lamp in the tool, marked "air bag connector voltage" should illuminate. If it does not illuminate, replace the tool.

Air bag deployment tool lamp illumination chart (Battery connected)

Switch operation	Left side lamp, green* "AIR BAG CONNECTOR VOLTAGE"	Right side lamp, green* "DEPLOYMENT TOOL POWER"
OFF	OFF	ON
ON	ON	ON

*: If this lamp glows red, the tool is connected to the battery incorrectly. Reverse the connections and make sure the lamp glows green.

Disposal of Air Bag Module and Seat Belt Pre-tensioner (Cont'd)

DEPLOYMENT PROCEDURES FOR AIR BAG MODULE (OUTSIDE OF VEHICLE)

Unless the vehicle is being scrapped, deploying the air bag in the vehicle is not recommended. This may cause damage to the vehicle interior.

Anchor air bag module in a vise secured to a firm foundation during deployment.

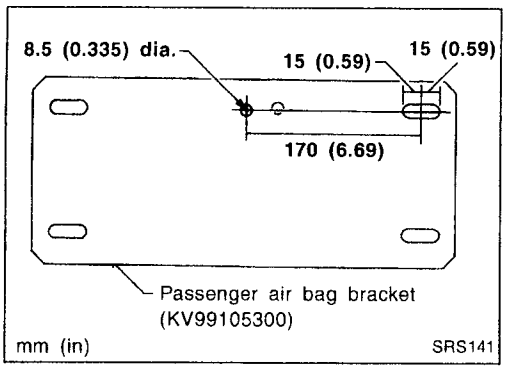

Deployment of driver's air bag module (outside of vehicle)

1. Make an 8.5 mm (0.335 in) diameter hole in passenger air bag bracket (SST: KV99105300) at the position shown in figure at left.
2. Using wire, secure air bag module to passenger air bag bracket (SST: KV99105300) at two places.

CAUTION:

Use wire of at least 1 mm (0.04 in) diameter.

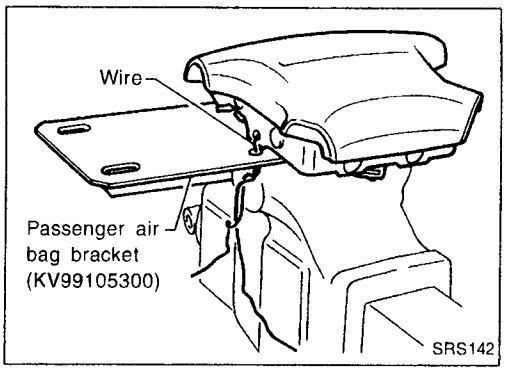

3. Firmly secure passenger air bag bracket (SST: KV99105300) with air bag module attached, in a vise.

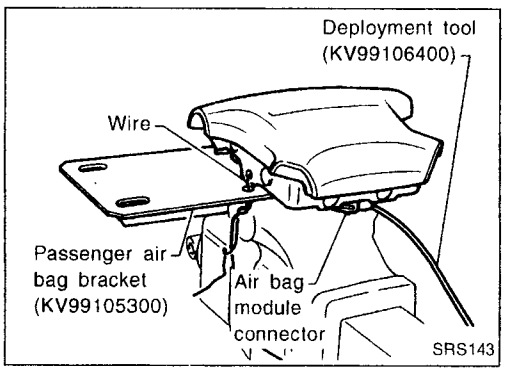

4. Connect deployment tool (SST: KV99106400) to air bag module connector.

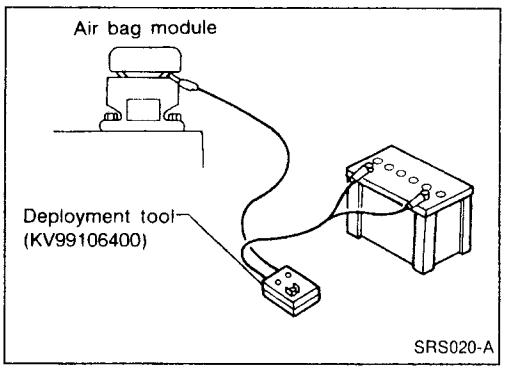

5. Connect red clip of deployment tool to battery positive terminal and black clip to negative terminal.
6. The lamp on the right side of the tool, marked "deployment tool power", should glow green, not red.
7. Press the button on the deployment tool. The left side lamp on the tool, marked "air bag connector voltage", will illuminate and the air bag module will deploy.

CAUTION:

When deploying the air bag module, stand at least 5 m (16 ft) away from the air bag module.

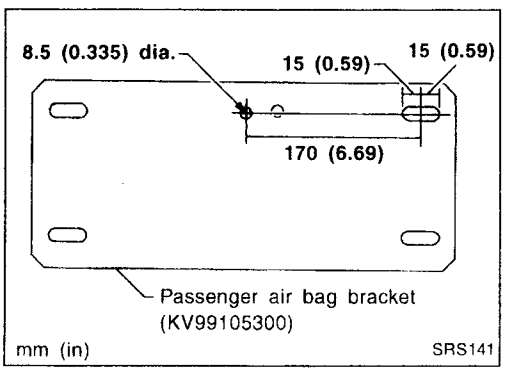

Deployment of passenger air bag module (outside of vehicle)

1. Make an 8.5 mm (0.335 in) diameter hole in passenger air bag bracket (SST: KV99105300) at the position shown in figure at left.

Disposal of Air Bag Module and Seat Belt Pre-tensioner (Cont'd)

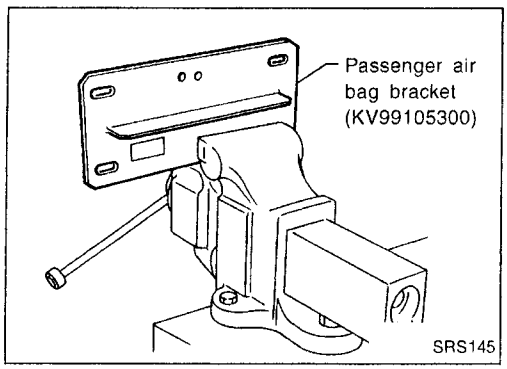

2. Firmly secure passenger air bag bracket (SST: KV99105300) in a vise.

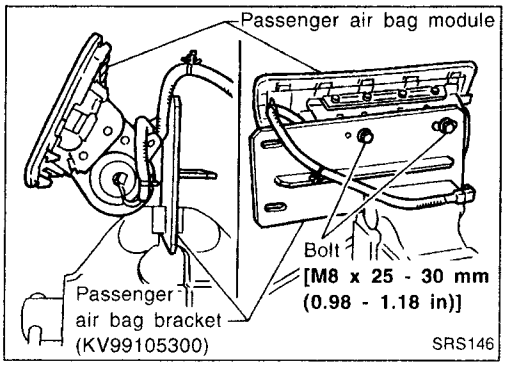

3. Match the two holes in passenger air bag bracket (held in vise) and passenger air bag module and fix them with two bolts [M8 x 25 - 30 mm (0.98 - 1.18 in)].

CAUTION:
If a gap exists between passenger air bag module and passenger air bag bracket, use a piece of wood inserted in the gap to stabilize the air bag module.

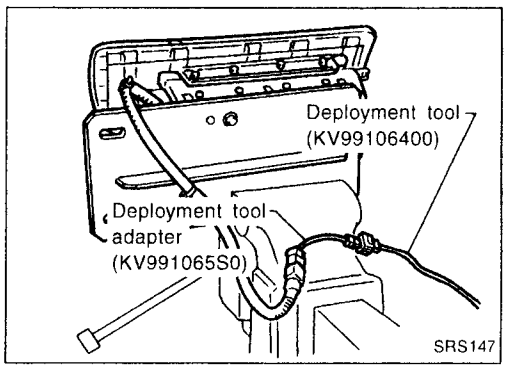

4. Connect deployment tool adapter (SST: KV991065S0) to deployment tool (SST: KV99106400) connector and connector on either side of air bag module.
5. Connect red clip of deployment tool to battery positive terminal and black clip to negative terminal.
6. The lamp on the right side of the tool, marked "deployment tool power", should glow green, not red.
7. Press the button on the deployment tool. The left side lamp on the tool, marked "air bag connector voltage", will illuminate and the air bag module will deploy.

CAUTION:
Whwn deploying the air bag module, stand at least 5 m (16 ft) away from the air bag module.

8. Activate the other inflator.

CAUTION:
Always activate one inflator at a time.

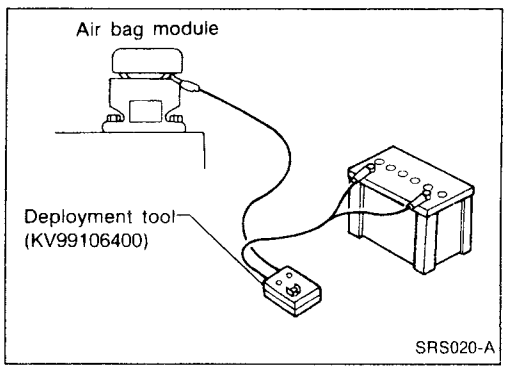

RS

Disposal of Air Bag Module and Seat Belt Pre-tensioner (Cont'd)

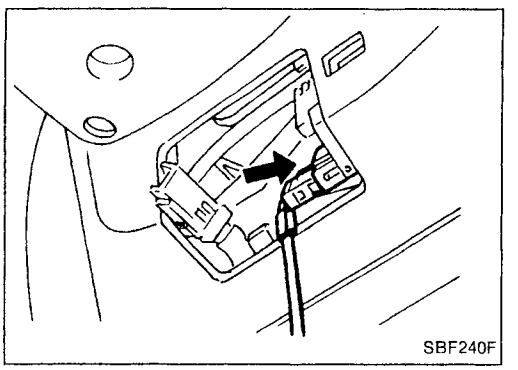
SBF240F

DEPLOYMENT OF AIR BAG MODULE WHILE MOUNTED IN VEHICLE

When disposing of a vehicle, deploy air bag module while it is mounted in vehicle.

CAUTION:

When deploying air bag module, ensure vehicle is empty.

1. Disconnect both battery cables and wait 10 minutes.
2. Disconnect air bag module connector.
3. Connect deployment tool (SST: KV99106400) to air bag module.
4. Connect red clip of deployment tool to battery positive terminal and black clip to negative terminal.
5. The lamp on the right side of the tool, marked "deployment tool power", should glow green, not red.
6. Press the button on the deployment tool. The left side lamp on the tool, marked "air bag connector voltage", will illuminate and the air bag module will deploy.

CAUTION:

Active only one passenger air bag module inflator at a time.

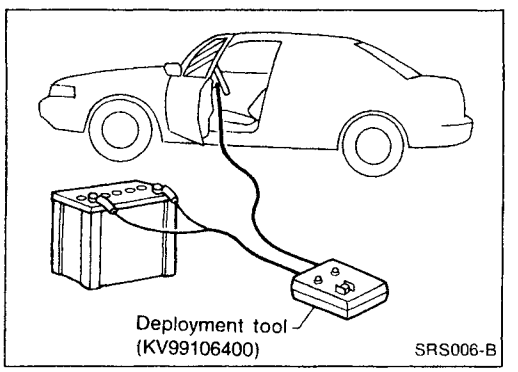

SRS006-B

DEPLOYMENT OF SEAT BELT PRE-TENSIONER (OUTSIDE OF VEHICLE)

1. Remove seat belt unit with pre-tensioner. Refer to RS-3 fordetails.

CAUTION:

Before removing seat belt pre-tensioner assembly, be sure to lock safety lever to make seat belt pre-tensioner inoperative.

2. Cut seat belt off at upper part of pre-tensioner.

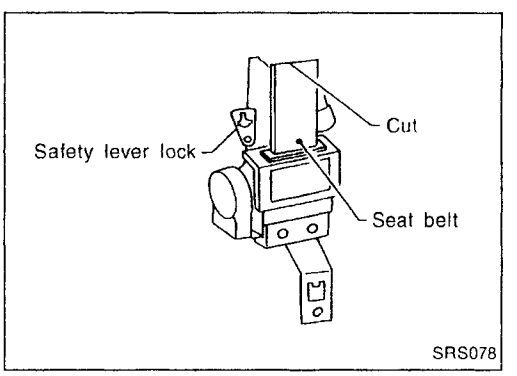

SRS078

3. Tie a strong string at least 6 m (20 ft) long to pre-tensioner body, with pre-tensioner cylinder facing down.

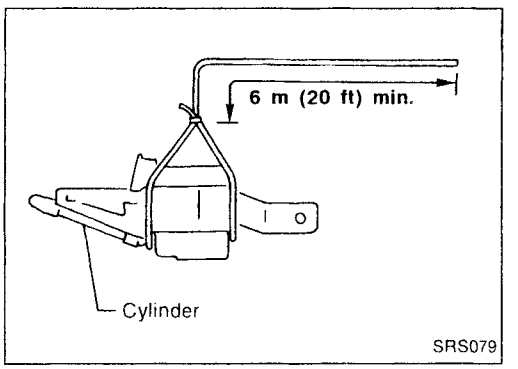

SRS079

4. Move lever in direction of arrow to unlock operation protection system. Pre-tensioner assembly is now ready for operation.

- **After unlocking operation protection system, be careful not to bump pre-tensioner assembly.**

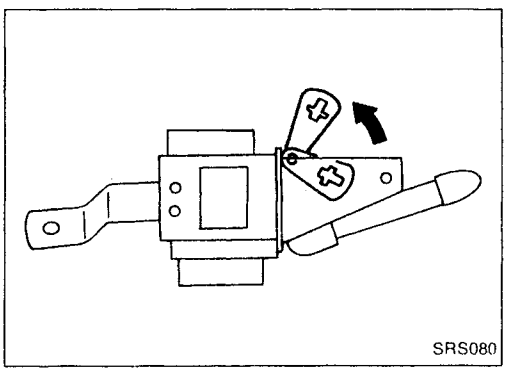
SRS080

Disposal of Air Bag Module and Seat Belt Pre-tensioner (Cont'd)

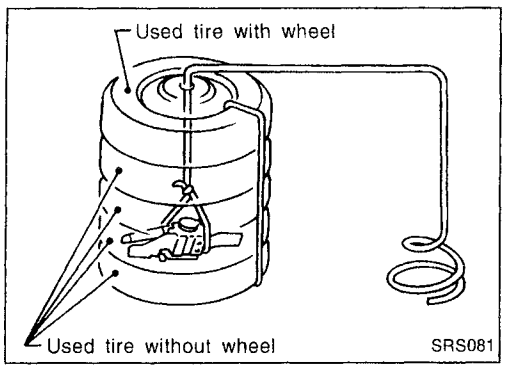

5. Place five used tires (four without rims and one with) on a concrete floor, as shown in the figure, so that they encircle pre-tensioner. Route end of the string through the center of the rim.
- **Make sure pre-tensioner is away from any of the tires to prevent any shocks being applied.**

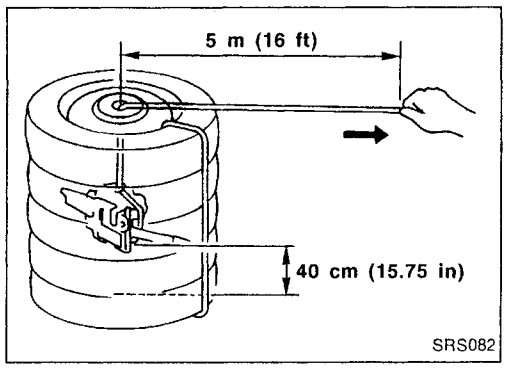

6. From a distance of more than 5 m (16 ft) away from tires, pull string until pre-tensioner is approximately 400 mm (15.75 in) above the ground.
- **Before pulling string, once again for safety, check that the area around the tires is clear.**

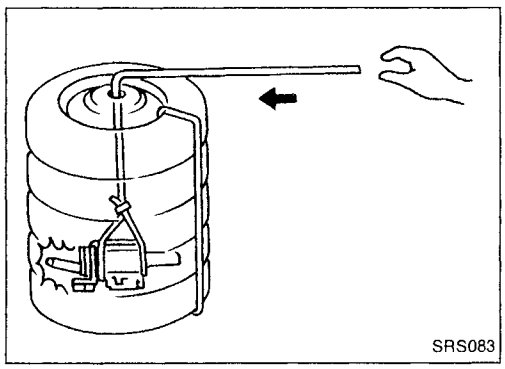

7. Release string to allow the pre-tensioner to hit the ground. Pre-tensioner will now deploy.
- **The pre-tensioner cylinder is too hot to touch immediately after deployment; therefore, wait at least 10 minutes until it cools down.**
- **Although the gas which is discharged during deployment is harmless, avoid inhaling as it can cause some discomfort.**
8. Before disposing of pre-tensioner, re-check that it has properly deployed. If it has not, repeat steps 3 through 7 above.
- **A pre-tensioner deploying can be amply heard even at a distance of 5 m (16 ft).**
- **After pre-tensioner has deployed, the rubber cap is separated from cylinder head by gas generated during deployment.**

RS

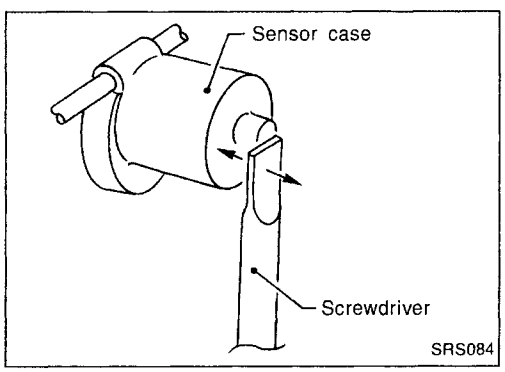

- Move screwdriver or similar ferrous metal close to the magnet built into the rear of sensor case. If it is attracted, pre-tensioner has not deployed yet; if it is not attracted, pre-tensioner has already been deployed.

CAUTION:

Be extremely careful not to apply any impacts to the pre-tensioner until you are absolutely sure pre-tensioner has been deployed.

Disposal of Air Bag Module and Seat Belt Pre-tensioner (Cont'd)

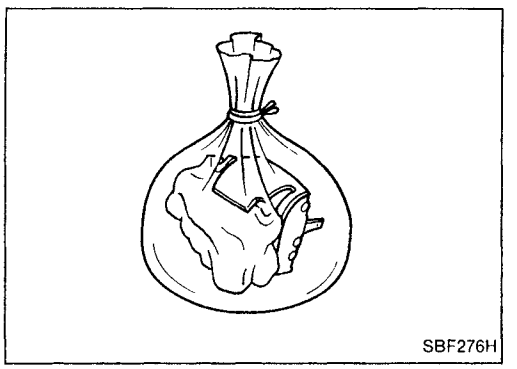
SBF276H

DISPOSING OF AIR BAG MODULE AND SEAT BELT PRE-TENSIONER

Deployed air bag module and seat belt pre-tensioner are very hot. Before disposing of air bag module and seat belt pre-tensioner, wait at least 30 minutes. Seal them in a plastic bag before disposal.

CAUTION:

- **Never apply water to a deployed air bag module and seat belt pre-tensioner.**
- **Be sure to wear gloves when handling a deployed air bag module and seat belt pre-tensioner.**
- **No poisonous gas is produced upon air bag module deployment. However, be careful not to inhale gas since it irritates throat and can cause choking.**
- **Do not attempt to disassemble air bag module and seat belt pre-tensioner.**
- **Air bag module and seat belt pre-tensioner can not be re-used.**
- **Wash your hands clean after finishing work.**

How to Perform Trouble Diagnoses for Quick and Accurate Repair

A good understanding of the malfunction conditions can make troubleshooting faster and more accurate. In general, each customer feels differently about a problem. It is important to fully understand the symptoms or conditions for a customer complaint.

INFORMATION FROM CUSTOMER

WHAT ..... Vehicle model
WHEN ..... Date, Frequencies
WHERE ..... Road conditions
HOW ..... Operating conditions, Symptoms

PRELIMINARY CHECK

Check that the following parts are in good order.
- Battery [Refer to MA section ("GENERAL MAINTENANCE").]
- Fuse [Refer to EL section ("Fuse", "POWER SUPPLY ROUTING").]
- System component-to-harness connections

DIAGNOSIS FUNCTION

The SRS self-diagnosis results can be read by using "AIR BAG" warning lamp and/or CONSULT.

	USING WARNING LAMP		USING CONSULT
	User mode	Diagnosis mode	
Dual air bag system	X	X	X
Single air bag system	X		
Seat belt pre-tensioner			

The reading of these results is accomplished using one of two modes — "User mode" and "Diagnosis mode".
The User mode is exclusively prepared for the customer (driver). This mode warns the driver of a system malfunction through the operation of the "AIR BAG" warning lamp.
The Diagnosis mode allows the technician to locate and inspect the malfunctioning part.
The mode applications for the "AIR BAG" warning lamp and CONSULT are as follows:

	User mode	Diagnosis mode	Display type
"AIR BAG" warning lamp	X	X	ON-OFF operation
CONSULT		X	Monitoring

Seat belt pre-tensioner can not be diagnosed by using warning lamp and/or CONSULT. When seat belt pre-tensioner is requires servicing, visually check seat belt pre-tensioner assembly. If damaged, replace with a new one.

DIAGNOSIS MODE FOR CONSULT (For Dual Air Bag System)

- SELF-DIAG RESULTS
  A current Self-diagnosis result (also indicated by the number of warning lamp flashes in the Diagnosis mode) is displayed on the CONSULT screen in real time. This refers to a malfunctioning part requiring repairs.

How to Perform Trouble Diagnoses for Quick and Accurate Repair (Cont'd)

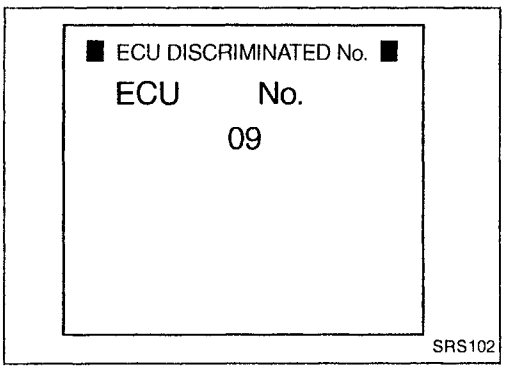

- ECU DISCRIMINATED NO.
  The diagnosis sensor unit for each vehicle model is assigned with its own, individual classification number. This number will be displayed on the CONSULT screen, as shown at left. When replacing the diagnosis sensor unit, refer to the part number for the compatibility. After installation, replacement with a correct unit can be checked by confirming this classification number on the CONSULT screen.
  For NISSAN model N15, the diagnosis sensor unit classification number assigned is 09.

How to Perform Trouble Diagnoses for Quick and Accurate Repair (Cont'd)

CAUTION:

- **Do not use a circuit tester to check SRS harness connectors unless instructed to in this Service Manual. For dual air bag system, SRS wiring harnesses are covered with yellow insulation either just before the harness connectors or for complete harness, for easy identification.**
- **Do not attempt to repair, splice or modify the SRS wiring harness. If the harness is damaged, replace it with a new one.**
- **Keep ground portion clean.**

WORK FLOW

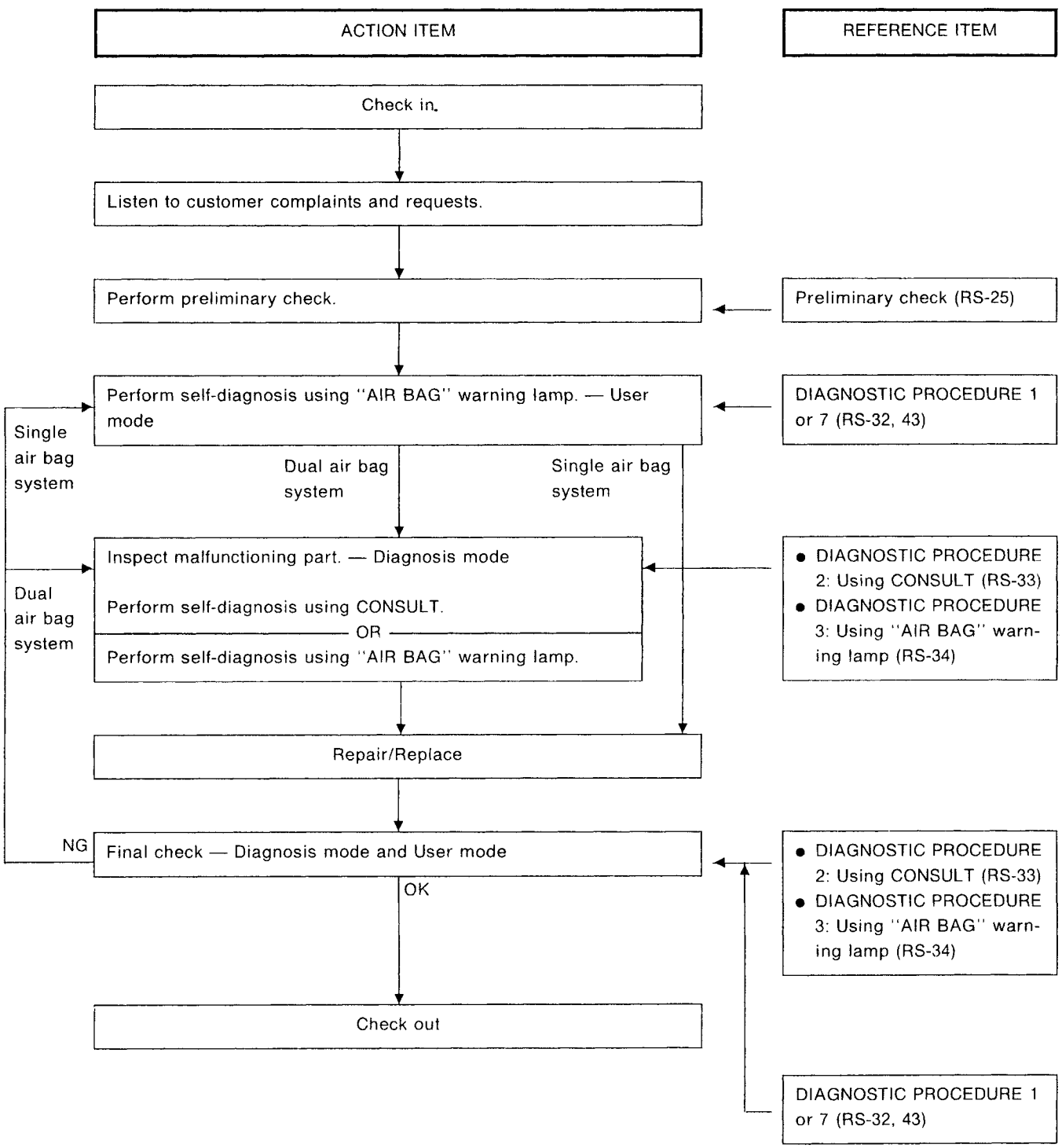

RS

Schematic

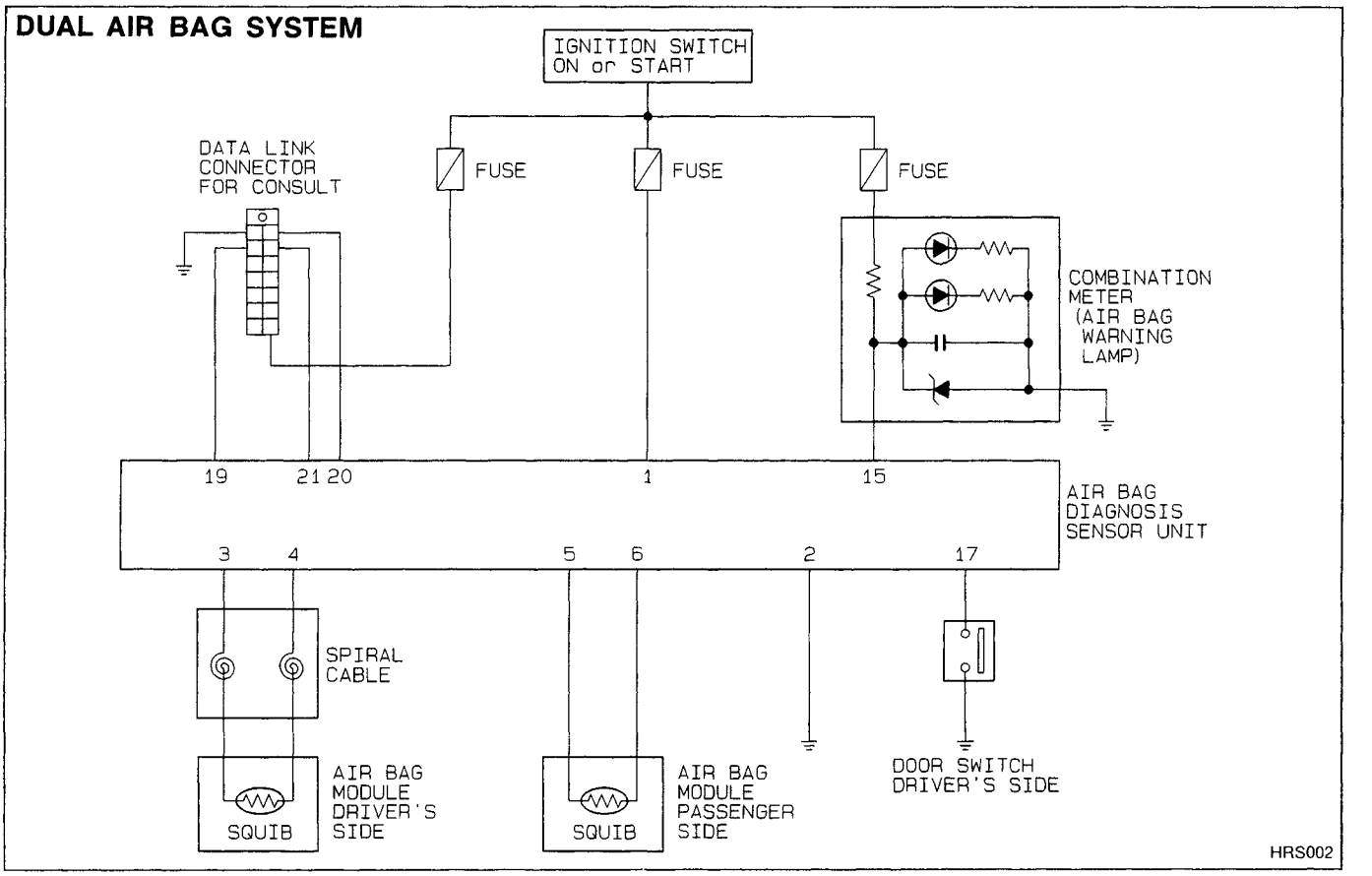
DUAL AIR BAG SYSTEM
IGNITION SWITCH
ON or START
DATA LINK
CONNECTOR
FOR CONSULT
FUSE
FUSE
FUSE
COMBINATION
METER
(AIR BAG
WARNING
LAMP)
19
21 20
1
15
AIR BAG
DIAGNOSIS
SENSOR UNIT
3
4
5
6
2
17
SPIRAL
CABLE
AIR BAG
MODULE
DRIVER'S
SIDE
SQUIB
AIR BAG
MODULE
PASSENGER
SIDE
SQUIB
DOOR SWITCH
DRIVER'S SIDE
HRS002

Wiring Diagram — SRS —

DUAL AIR BAG SYSTEM

RS-SRS-02

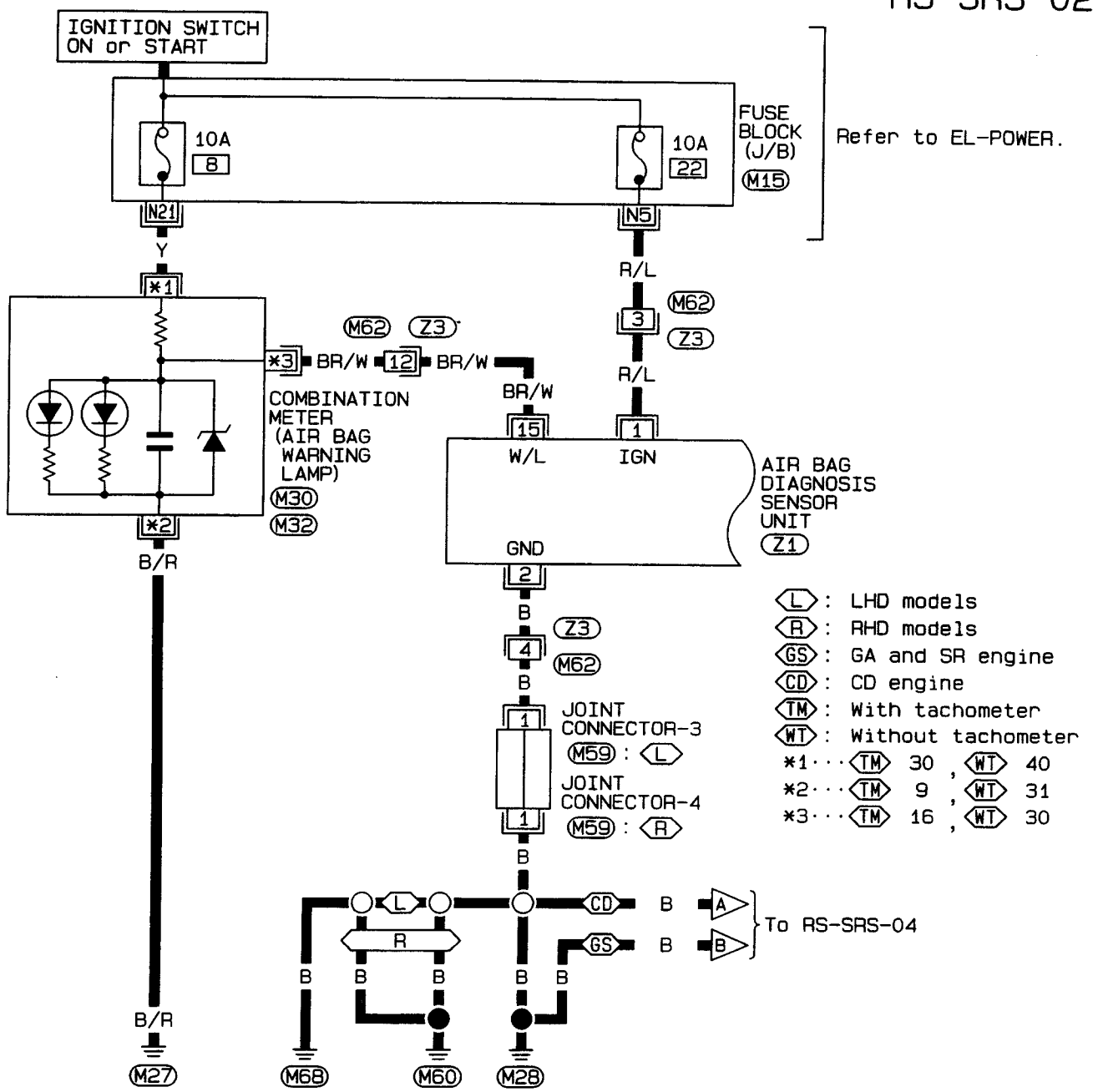

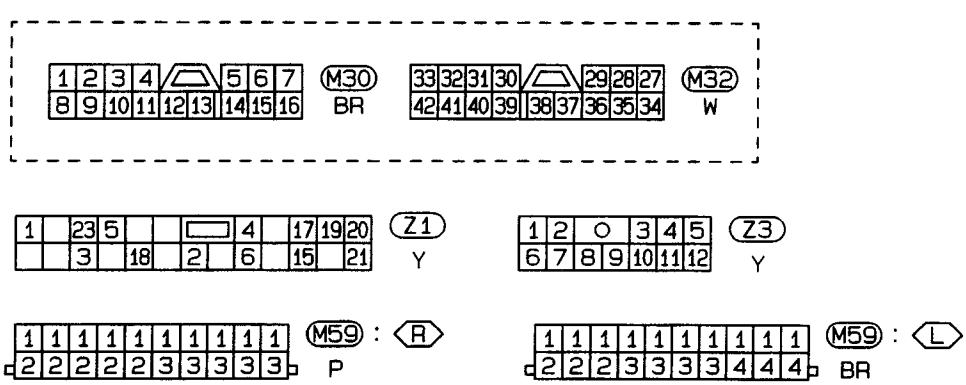

Refer to last page (Foldout page).

M15

HRS004

Wiring Diagram — SRS — (Cont'd)

RS-SRS-03

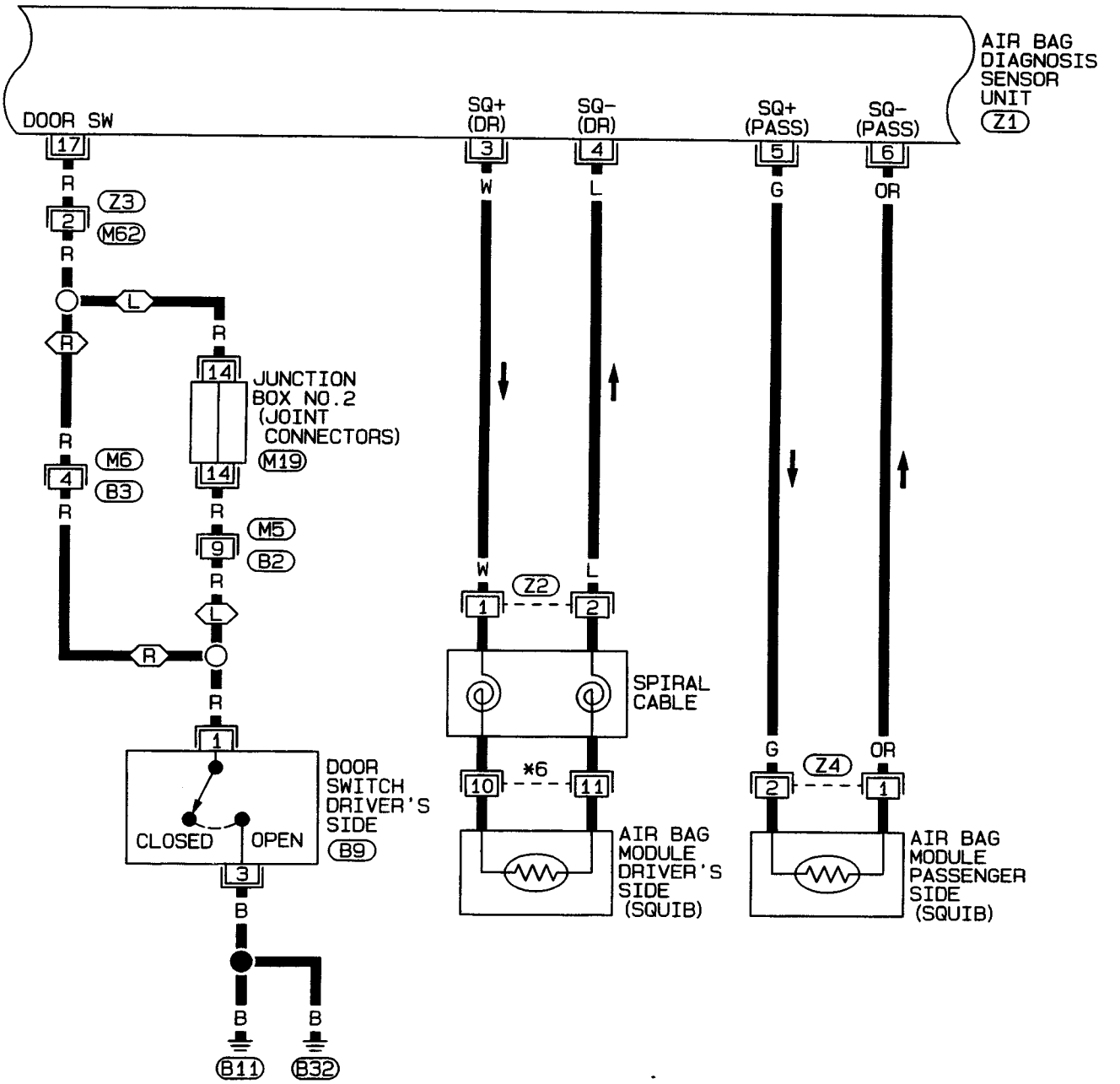

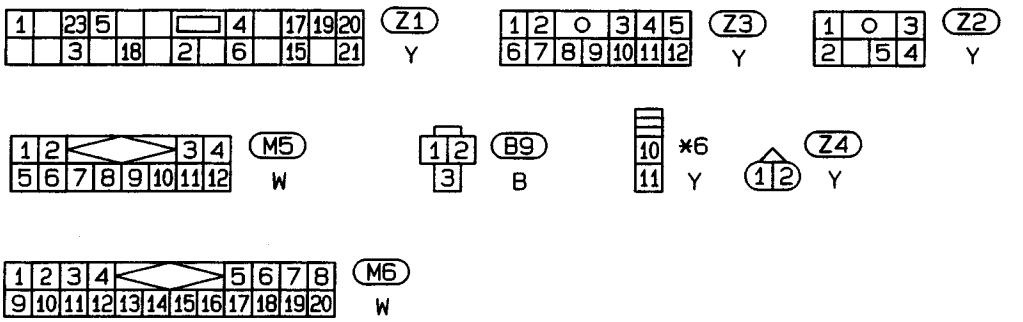

Refer to last page (Foldout page).

M19

HRS005

Wiring Diagram — SRS — (Cont'd)

RS-SRS-04

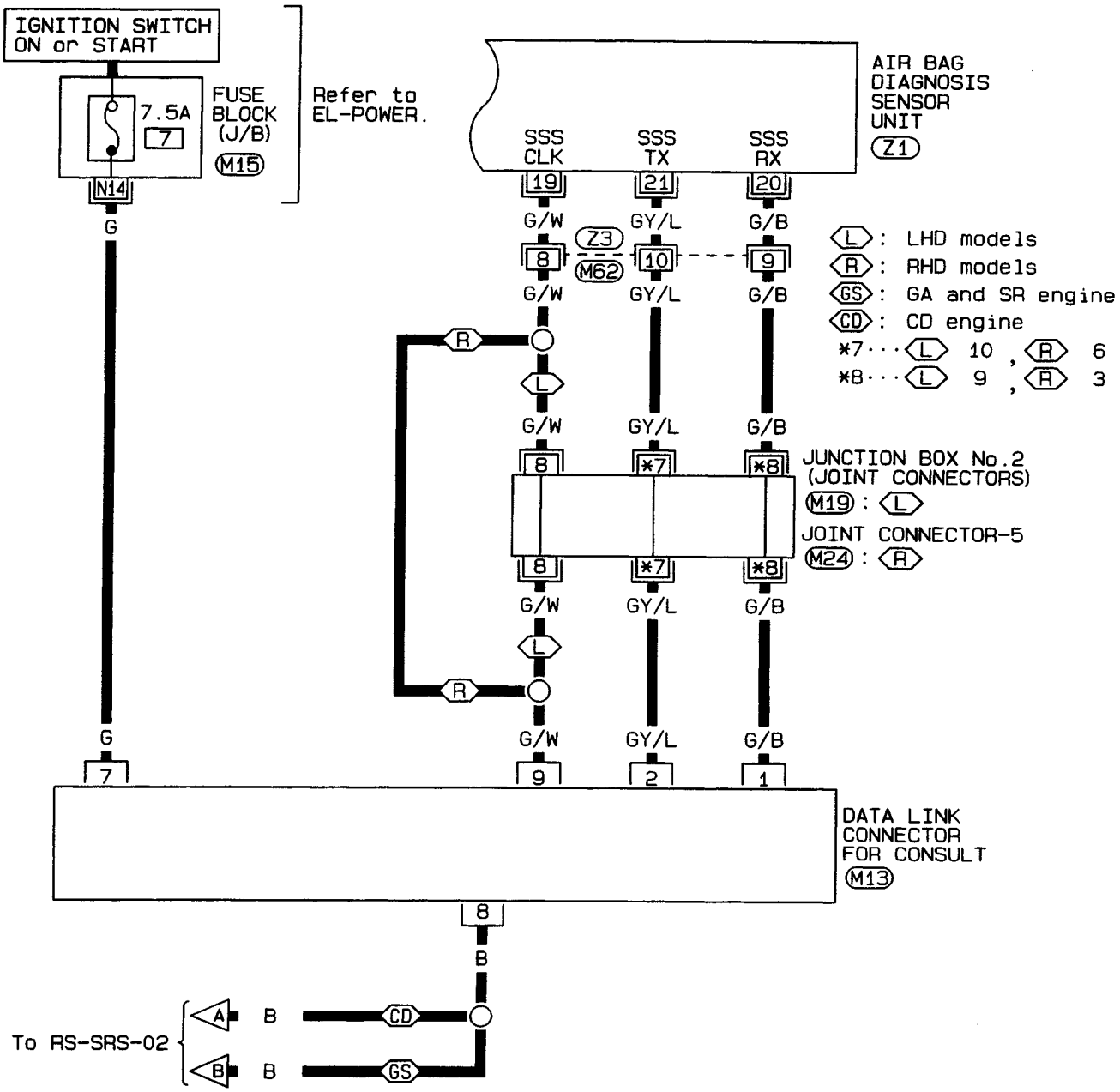

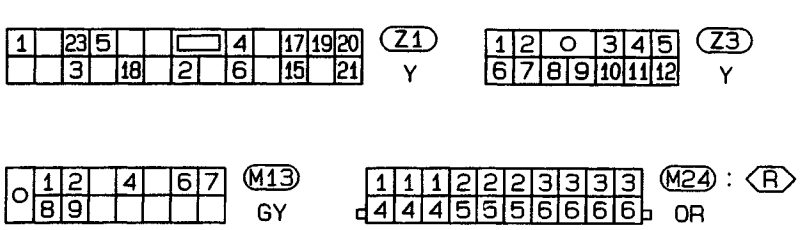

Refer to last page (Foldout page).

M15

M19

HRS006

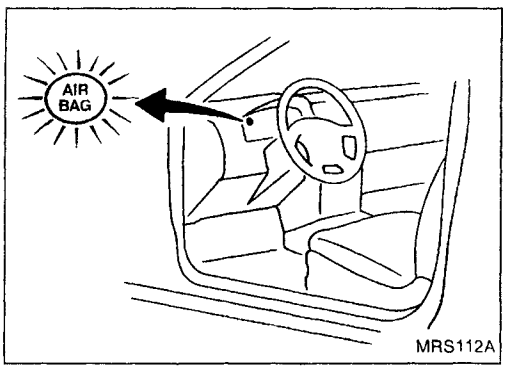

Self-diagnosis

DIAGNOSTIC PROCEDURE 1 (without CONSULT)

Checking SRS operation by using "AIR BAG" warning lamp — User mode

1. After turning ignition switch from "OFF" to "ON", "AIR BAG" warning lamp operates.
2. Compare "AIR BAG" warning lamp operation to the chart below.

"AIR BAG" warning lamp operation — User mode —	SRS condition	Reference item
	No malfunction is detected. No further action is necessary.	—
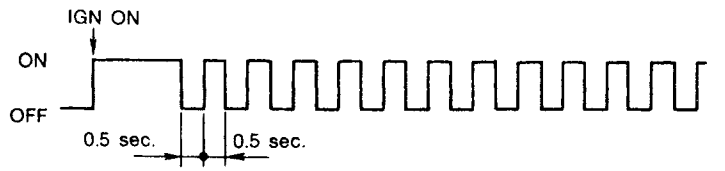	The system has problem and needs to be repaired as indicated.	Go to DIAGNOSTIC PROCEDURE 2, or 3 (RS-33 or 34).
	Air bag is deployed.	Go to COLLISION DIAGNOSIS (RS-40).
	Fuse, diagnosis sensor unit or harness is malfunctioning and needs to be repaired.	Go to DIAGNOSTIC PROCEDURE 4 (RS-38).
	Diagnosis sensor unit or "AIR BAG" warning lamp circuit is shorted or open and needs to be repaired.	Go to DIAGNOSTIC PROCEDURE 5 (RS-38).

NOTE:
If "AIR BAG" warning lamp operates differently from the operations shown above, refer to "AIR BAG" warning lamp operation — Diagnosis mode —, DIAGNOSTIC PROCEDURE 3, RS-34. Then repair as necessary.

Self-diagnosis (Cont'd)

DIAGNOSTIC PROCEDURE 2 (with CONSULT)

Inspecting SRS malfunctioning parts by using CONSULT — Diagnosis mode

1. Turn ignition switch "OFF".
2. Connect "CONSULT" to Data link connector.

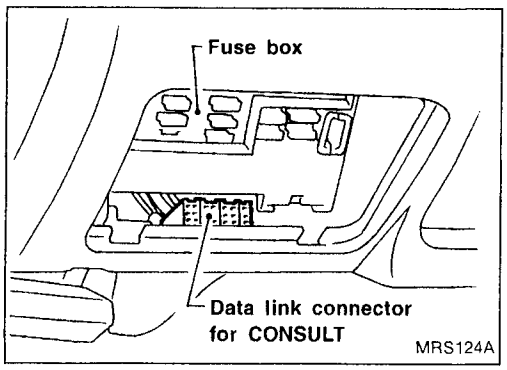

3. Turn ignition switch "ON".
4. Touch "START".

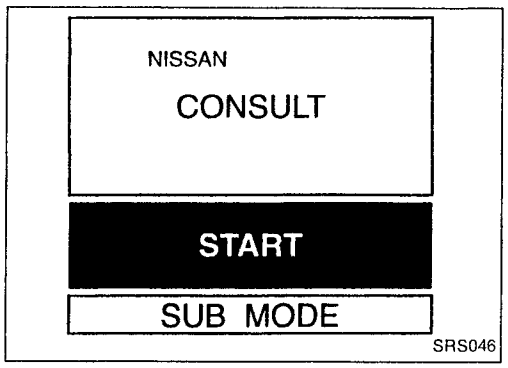

5. Touch "AIRBAG".

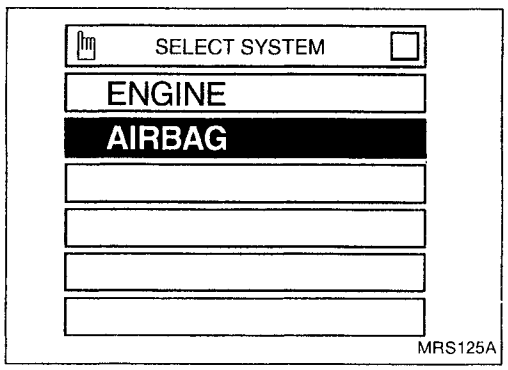

6. Touch "SELF-DIAG RESULTS".

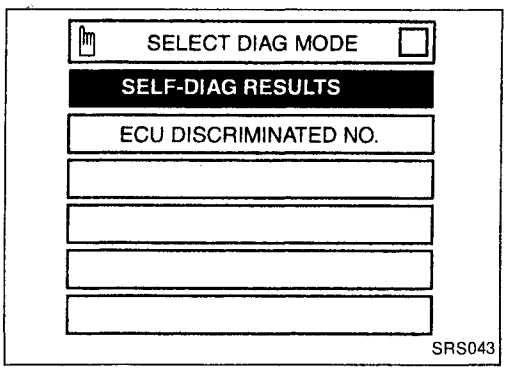

7. Diagnostic codes are displayed on "SELF-DIAG RESULTS".

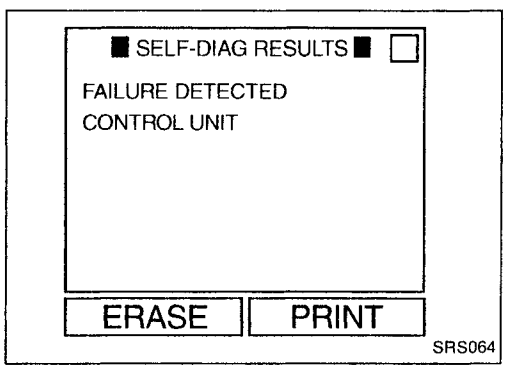

RS

Self-diagnosis (Cont'd)

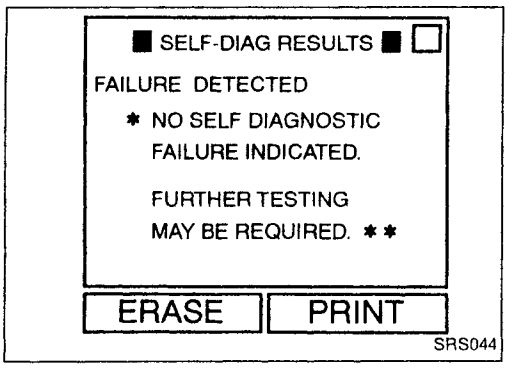

If no self-diagnostic failure is detected on "SELF-DIAG RESULTS", no further action is necessary. Touch "BACK" key of CONSULT until SELECT SYSTEM MODE appears, then turn off CONSULT.

8. Touch "PRINT".
9. Compare diagnostic codes to the CONSULT DIAGNOSTIC CODE CHART, page RS-36.
10. Touch "BACK" key of CONSULT until SELECT SYSTEM MODE appears, then turn off CONSULT.
11. Turn ignition switch "OFF", then disconnect CONSULT and both battery cables.
12. Repair the system as outlined by the "Repair order" in CONSULT DIAGNOSTIC CODE CHART, that corresponds to the problem code. For replacement procedure of component parts, refer to RS-12.
13. After repairing the system, conduct DIAGNOSTIC PROCEDURE 2 again.
    If repair is completed, turn ignition switch "OFF", and disconnect CONSULT. Then go to DIAGNOSTIC PROCEDURE 1, page RS-32.

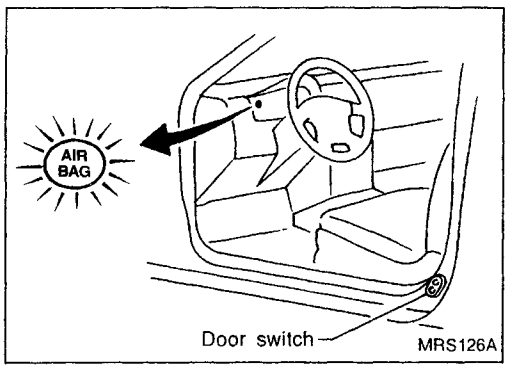

DIAGNOSTIC PROCEDURE 3 (without CONSULT)

Inspecting SRS malfunctioning parts by using "AIR BAG" warning lamp — Diagnosis mode

1. Open driver's door.
2. Turn ignition switch from "OFF" to "ON".
3. Press driver's door switch at least 5 times within 7 seconds after turning ignition switch "ON".
   SRS is now in Diagnosis mode.
4. "AIR BAG" warning lamp operates in diagnosis mode as follows:

NOTE:
If SRS does not enter diagnostic mode, go to DIAGNOSTIC PROCEDURE 6, page RS-39.

Self-diagnosis (Cont'd)

No.	"AIR BAG" warning lamp operation — Diagnosis mode —		SRS condition
1	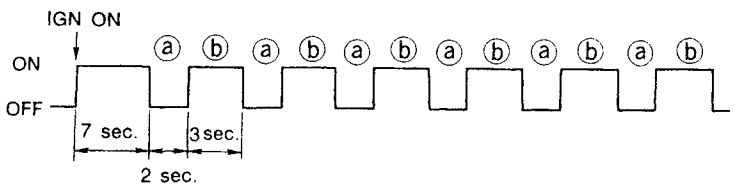 MRS100A	ⓐ through ⓑ are repeated.	No malfunction is detected. No further action is necessary.
2	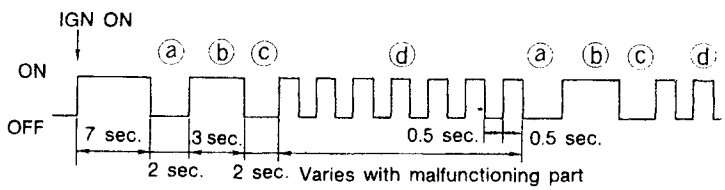 MRS099A	ⓐ through ⓓ are repeated. NOTE: ⓐ — Interval I ⓑ — Start signal (Start signal identifies display modes) ⓒ — Interval II ⓓ — Indicates malfunctioning part (0.5 sec. ON and 0.5 sec. OFF is counted as one flash.)	The system has problem and needs to be repaired.

5. Malfunctioning part is indicated by the number of flashes (part ⓓ). Compare the number of flashes to WARNING LAMP FLASH CODE CHART, page RS-37, and locate malfunctioning part.
6. Turn ignition switch "OFF", and disconnect both battery cables.
7. Repair the system as outlined by the "Repair order" in WARNING LAMP FLASH CODE CHART that corresponds to the flash code. For replacement procedure of component parts, refer to RS-12.
8. After repairing the system, conduct DIAGNOSTIC PROCEDURE 3 again.
   If repair is completed, turn ignition switch "OFF" and then turn "ON". Press driver's door switch at least 5 times within 7 seconds after turning ignition switch "ON".
9. The system is reset from Diagnostic mode to User mode. Next, go to DIAGNOSTIC PROCEDURE 1, page RS-32.

Self-diagnosis (Cont'd)

CONSULT DIAGNOSTIC CODE CHART

Diagnostic item	Explanation	Repair order Recheck SRS at each replacement.
NO SELF DIAGNOSTIC FAILURE INDICATED.	• No malfunction is detected.	—
AIRBAG MODULE [OPEN]	• Driver's air bag module circuit is open. (including the spiral cable)	1. Visually check the wiring harness connections. 2. Replace the spiral cable. 3. Replace driver's air bag module. (Before disposing of it, it must be deployed.) 4. Replace the diagnosis sensor unit. 5. Replace the air bag harness.
AIRBAG MODULE [VB-SHORT]	• Driver's air bag module circuit is shorted to some power supply circuit. (including the spiral cable)	
AIRBAG MODULE [GND-SHORT]	• Driver's air bag module circuit is shorted to ground. (including the spiral cable)	
AIRBAG MODULE [SHORT]	• Driver's air bag module circuits are shorted to each other.	
ASSIST A/B MODULE [OPEN]	• Front passenger air bag module circuit is open.	1. Visually check the wiring harness connections. 2. Replace front passenger air bag module. (Before disposing of it, it must be deployed.) 3. Replace the diagnosis sensor unit. 4. Replace the air bag harness.
ASSIST A/B MODULE [VB-SHORT]	• Front passenger air bag module circuit is shorted to some power supply circuit.	
ASSIST A/B MODULE [GND-SHORT]	• Front passenger air bag module circuit is shorted to ground.	
ASSIST A/B MODULE [SHORT]	• Front passenger air bag module circuits are shorted to each other.	
CONTROL UNIT	• Diagnosis sensor unit is out of order.	1. Visually check the wiring harness connections. 2. Replace the diagnosis sensor unit. 3. Replace the air bag harness. 4. Replace the main harness.

*** Follow the procedures in numerical order when repairing malfunctioning parts. Confirm whether malfunction is eliminated using the air bag warning lamp (in user mode) or CONSULT each time repair is finished. If malfunction is still observed, proceed to the next step. When malfunction is eliminated, further repair work is not required.**

Self-diagnosis (Cont'd)

WARNING LAMP FLASH CODE CHART

Warning lamp	Flash code ⓓ (# of flashes)	Explanation	Repair order Recheck SRS at each replacement.
"AIR BAG" warning lamp	0	No malfunction is detected.	—
	2	The driver's air bag module circuit is out of order.	1. Visually check the wiring harness connections. 2. Replace the spiral cable. 3. Replace the driver's air bag module. (Before disposing of it, it must be deployed.) 4. Replace the diagnosis sensor unit. 5. Replace the air bag harness.
	7	The diagnosis sensor unit is out of order.	1. Visually check the wiring harness connections. 2. Replace the diagnosis sensor unit. 3. Replace the air bag harness. 4. Replace the main harness.
	8	The front passenger air bag module circuit is out of order.	1. Visually check the wiring harness connections. 2. Replace the front passenger air bag module. (Before disposing of it, it must be deployed.) 3. Replace the diagnosis sensor unit. 4. Replace the air bag harness.

*** Follow the procedures in numerical order when repairing malfunctioning parts. Confirm whether malfunction is eliminated using the air bag warning lamp (in user mode) or CONSULT each time repair is finished. If malfunction is still observed, proceed to the next step. When malfunction is eliminated, further repair work is not required.**

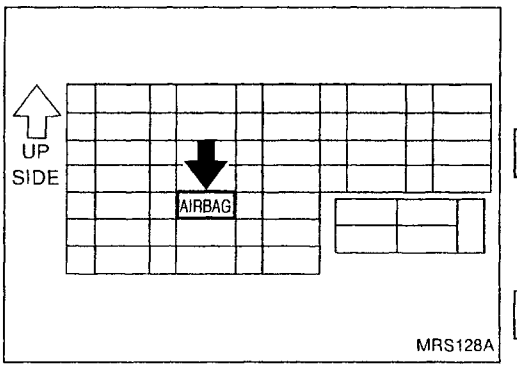

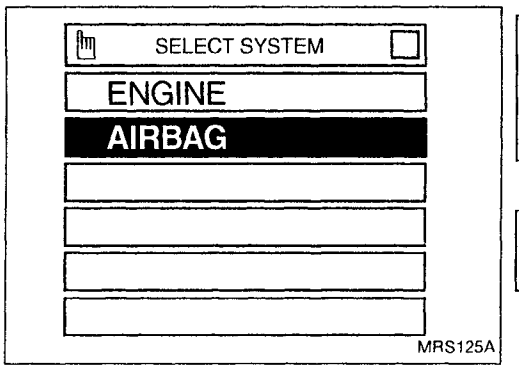

Trouble Diagnoses for Air Bag Warning Lamp

DIAGNOSTIC PROCEDURE 4

SYMPTOM: "AIR BAG" warning lamp does not turn off.

- Is air bag module deployed? — Yes → Replace air bag module and diagnosis sensor unit. Refer to COLLISION DIAGNOSIS, (RS-40).
- No ↓
- Is SRS "Air Bag" fuse (10A) OK? — No → Replace fuse.
- Yes ↓
- Connect CONSULT and touch "START".
  - Is "AIRBAG" displayed on CONSULT? — No → Replace diagnosis sensor unit.
- Yes ↓
- Is harness connection between warning lamp and diagnosis sensor unit OK? — No → Connect warning lamp and diagnosis sensor unit properly. If warning lamp still does not go off, replace harness.
- Yes ↓
- Replace diagnosis sensor unit.

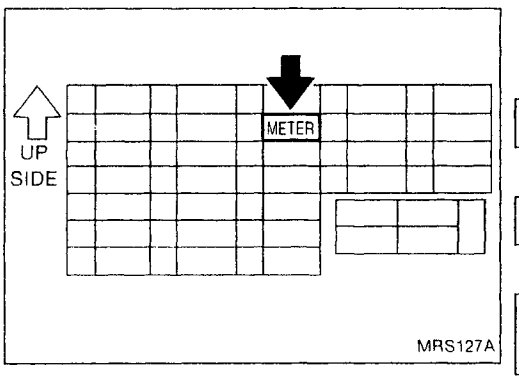

DIAGNOSTIC PROCEDURE 5

SYMPTOM: "AIR BAG" warning lamp does not turn on.

- Is warning lamp fuse OK? — No → Replace fuse.
- Yes ↓
- Is warning lamp LED OK?- — No → Replace warning lamp LED.
- Yes ↓
- Is harness connection between warning lamp and diagnosis sensor unit OK? — No → Connect warning lamp harness properly. If warning lamp still does not come on, replace harness.
- Yes ↓
- Replace diagnosis sensor unit.

Trouble Diagnoses for Air Bag Warning Lamp (Cont'd)

DIAGNOSTIC PROCEDURE 6

SYMPTOM: SRS does not enter Diagnostic mode.

A

B

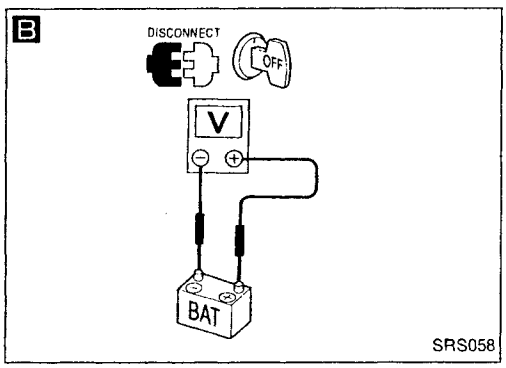

C

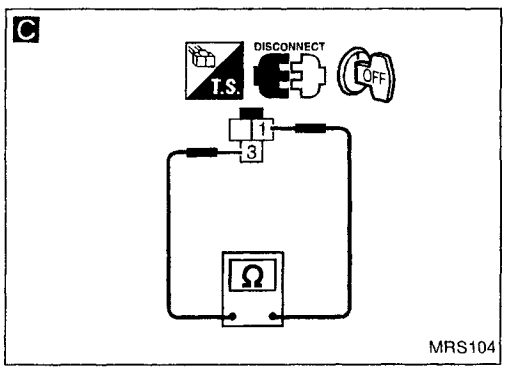

D

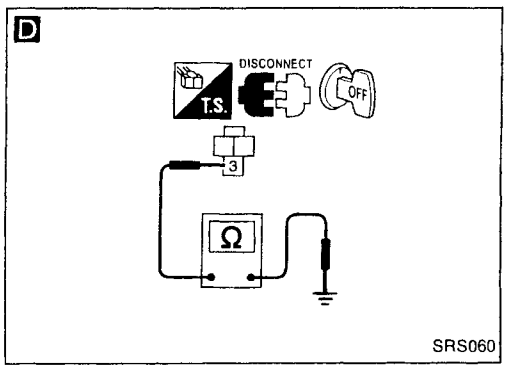

A

Is "AIR BAG" warning lamp blinking?

- No → SRS is in good order. Setting the CONSULT to the Diagnosis mode is impossible. No further action is necessary.
- Yes ↓

B

Disconnect both battery cables and check battery voltage using circuit tester.
- Is battery voltage more than 9V?

- No → Charge battery.
- Yes ↓

C

Remove driver's door switch and check continuity between driver's door switch connector terminals ① and ③ under the following conditions.

Condition	Continuity
Door switch is depressed (Door is closed).	YES
Door switch is released (Door is open).	NO

- No → Replace driver's door switch.
- Yes ↓

D

Check harness continuity between driver's door switch connector terminal ③ and body ground.
- Does continuity exist?

- No → Replace or repair harness.
- Yes ↓

Replace diagnosis sensor unit.

↓

Go to DIAGNOSTIC PROCEDURE 3.

RS

To repair the SRS, perform the following steps.

When SRS is activated in a collision:

① Replace the diagnosis sensor unit.
② Remove the air bag modules.
③ Check the SRS components using the table shown below:
- Replace any SRS components showing visible signs of damage (dents, cracks, deformation).

④ Conduct self-diagnosis. Refer to "Self-diagnosis" for details (RS-32). Ensure the remainder of the SRS is operating properly.
⑤ Install new air bag modules.
⑥ Conduct self-diagnosis again.

When SRS is not activated in a collision:

① Check the SRS components using the table shown below:
- Replace any SRS components showing visible signs of damage (dents, cracks, deformation).

② Conduct self-diagnosis using CONSULT and "'AIR BAG" warning lamp. Refer to "Self-diagnosis" for details (RS-32). Ensure entire SRS operates properly.

SRS inspection

Part	SRS is activated	SRS is NOT activated
Air bag module (driver and passenger side)	REPLACE Install with new bolts.	1. Remove air bag module. Check harness cover and connectors for damage, terminals for deformities, and harness for binding. 2-1. Install driver air bag module into the steering wheel to check fit and alignment with the wheel. 2-2. Install passenger air bag module into the instrument panel to check fit with the instrument panel. 3. No damage found, reinstall with new bolts. 4. If damaged—REPLACE. Air bag must be deployed before discarding.
Instrument panel	REPLACE Install with new bolts.	1. Check instrument panel for bending, deformities, or cracks. 2. If no damage is found, reinstall with new bolts. 3. If damaged—REPLACE.
Diagnosis sensor unit	REPLACE Install with new bolts.	1. Check case and bracket for dents, cracks or deformities. 2. Check connectors for damage, and terminals for deformities. 3. If no damage is found, reinstall with new bolts. 4. If damaged—REPLACE.
Steering wheel	1. Visually check steering wheel for deformities. 2. Check harness (built into steering wheel) and connectors for damage, and terminals for deformities. 3. Install air bag module to check fit or alignment with steering wheel. 4. Check steering wheel for excessive free play. 5. If no damage is found, reinstall with new bolts. 6. If damaged—REPLACE.	
Spiral cable	1. Visually check lock (engagement) pins and combination switch for damage. 2. Check connectors, flat cable and protective tape for damage. 3. Check steering wheel for noise, binding or heavy operation. 4. If no damage is found, reinstall with new bolts. 5. If damaged—REPLACE.	
Harness and Connectors	1. Check connectors for poor connection, damage, and terminals for deformities. 2. Check harness for binding, chafing, cuts, or deformities. 3. If no damage is found, reinstall the harness and connectors. 4. Damaged—REPLACE damaged section of harness. Do not attempt to repair, splice or modify any SRS harness.	

Schematic

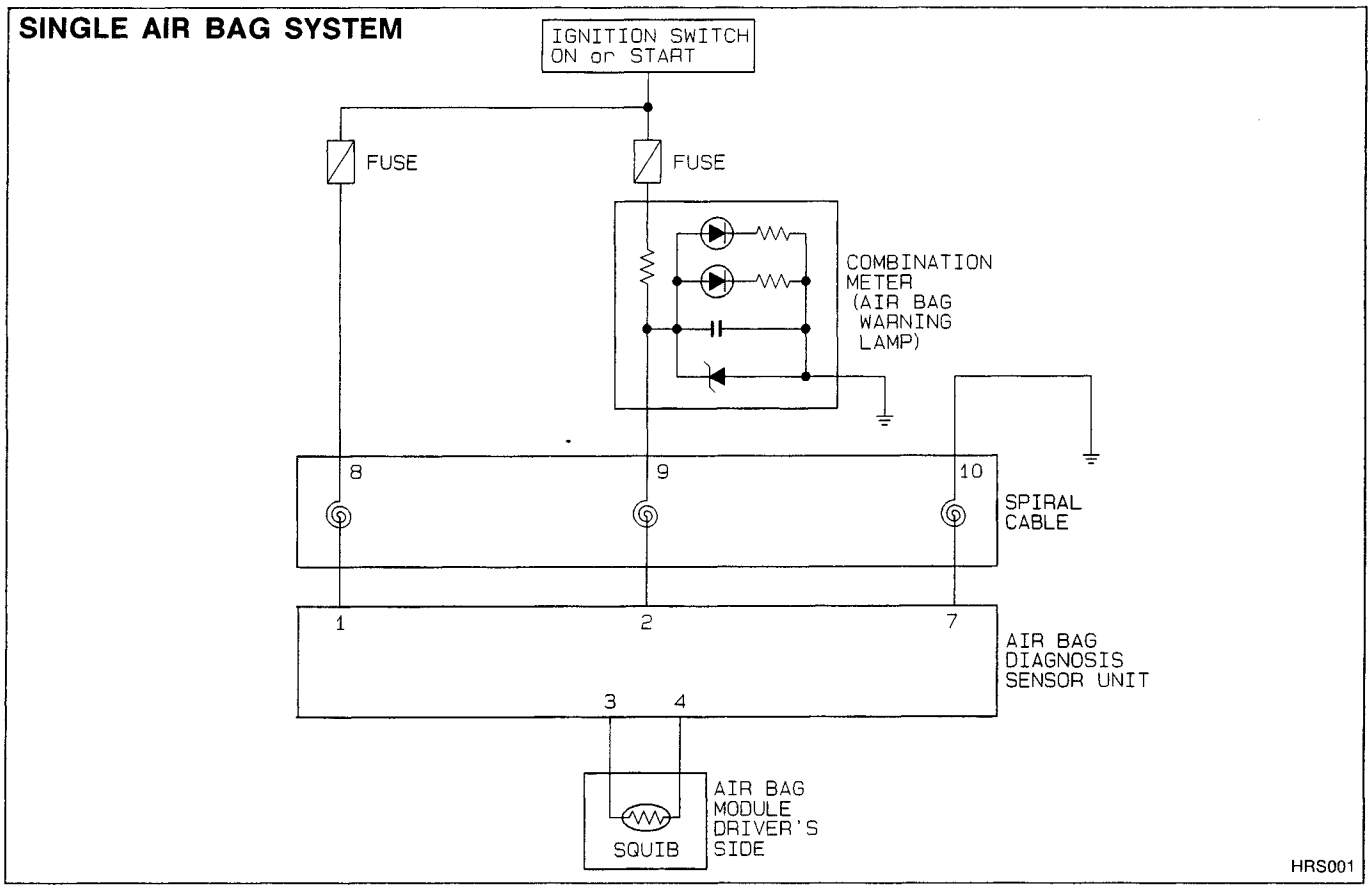

RS

Wiring Diagram — SRS —

SINGLE AIR BAG SYSTEM

RS-SRS-01

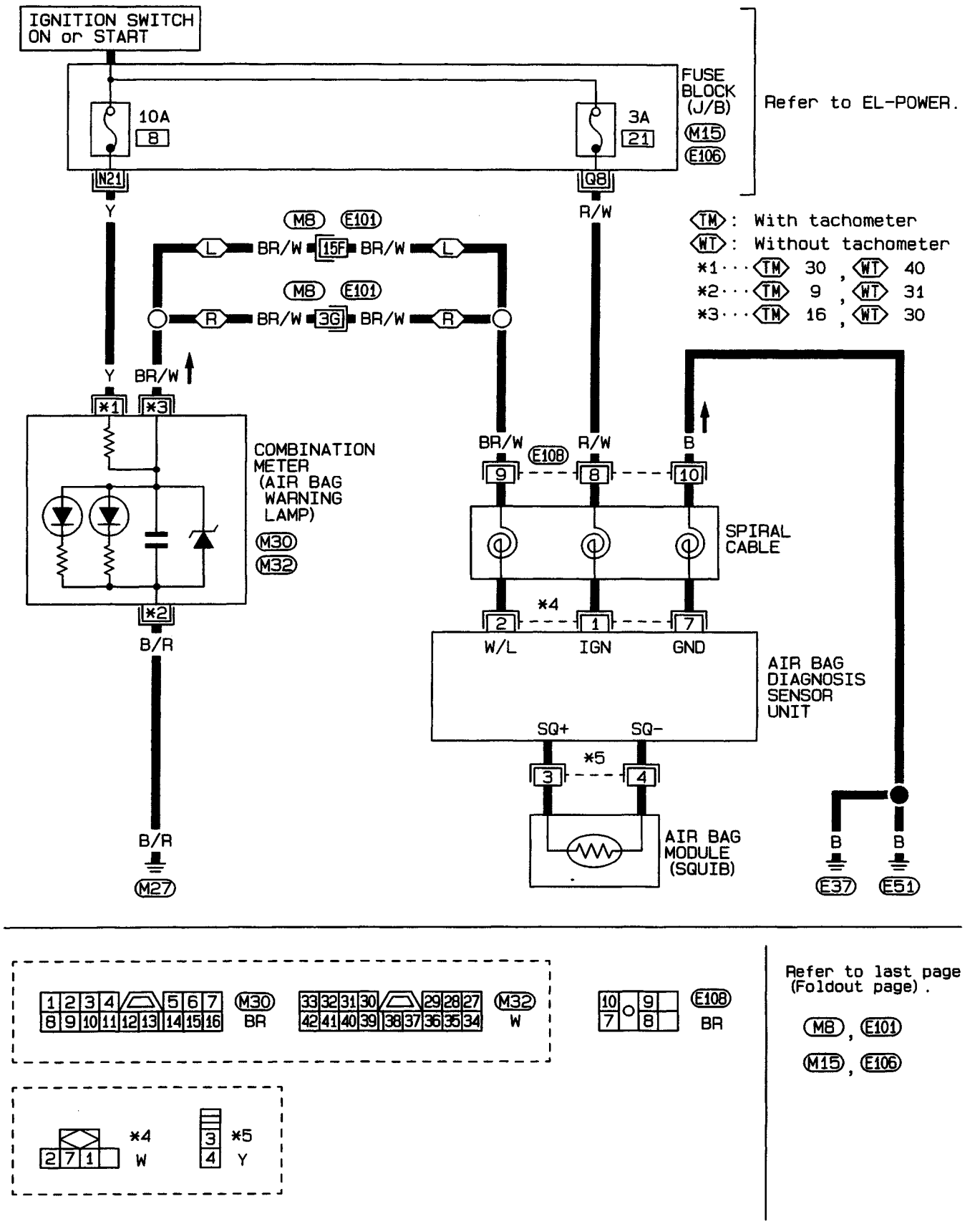

Refer to last page (Foldout page).

M8, E101

M15, E106

HRS003

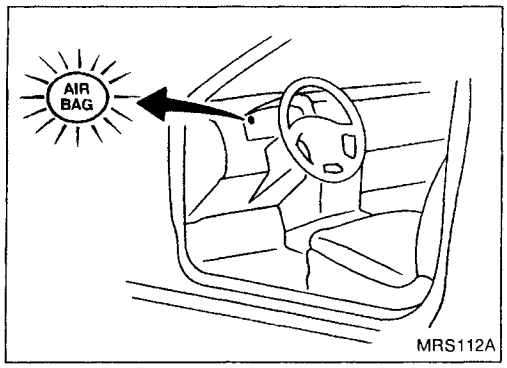

Self-diagnosis

DIAGNOSTIC PROCEDURE 7 (without CONSULT)

Checking SRS operation by using "AIR BAG" warning lamp — User mode

1. After turning ignition switch from "OFF" to "ON", "AIR BAG" warning lamp operates.
2. Compare "AIR BAG" warning lamp operation to the chart below.

Note: CONSULT cannot be used for trouble diagnoses.

"AIR BAG" warning lamp operation — User mode

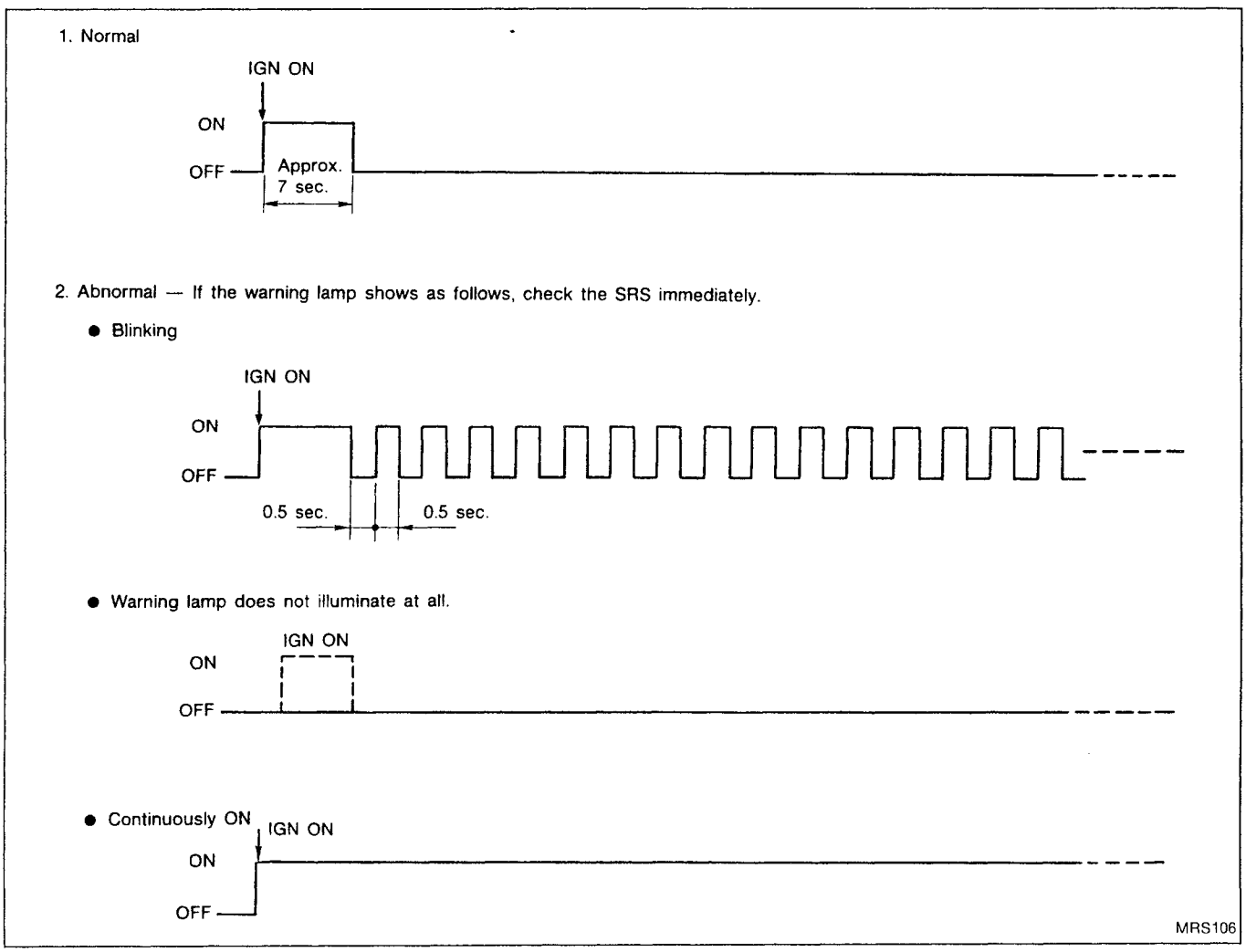

RS

Self-diagnosis (Cont'd)

REPAIR PROCEDURES

CAUTION:

Before servicing air bag, turn the ignition switch off and disconnect both battery cables and wait for at least 10 minutes.

Warning lamp operation	Explanation		Repair order
Warning lamp blinks.	Air bag has not deployed.	Open or short in the air bag module circuit.	1. Visually check the wiring harness and connectors. 2. Replace air bag module. 3. Replace steering wheel assembly (including diagnosis sensor unit).
		Malfunctioning diagnosis sensor unit	
Warning lamp does not illuminate at all.	Warning lamp fuse is blown.		1. Check warning lamp fuse. 2. Visually check the wiring harnesses and connectors. 3. Check warning lamp LED. 4. Replace steering wheel assembly (including diagnosis sensor unit). 5. Replace air bag harness assembly. 6. Replace combination meter.
	Open in the warning lamp circuit		
	Malfunctioning LED		
	Malfunctioning combination meter		
	Malfunctioning diagnosis sensor unit		
Warning lamp is continuously ON.	Air bag has deployed.*		Go to COLLISION DIAGNOSIS — Single Air Bag System, page RS-45.
	SRS air bag fuse is blown.		1. Check air bag fuse. 2. Visually check the wiring harnesses and connectors for combination meter, diagnosis sensor unit and spiral cable. 3. Replace spiral cable. 4. Replace steering wheel assembly (including diagnosis sensor unit). 5. Replace air bag harness assembly.
	Open in air bag harness or spiral cable circuit		
	Malfunctioning diagnosis sensor unit		

***: After air bag is deployed, warning lamp illuminates until the ignition switch is turned OFF. When the ignition switch is turned ON again, the warning lamp illuminates for approximately 7 seconds. It then blinks if malfunction is found, or goes out when there is no malfunction.**

Follow the procedures in numerical order when repairing malfunctioning parts. Confirm whether malfunction is eliminated using the air bag warning lamp each time repair is finished. If malfunction is still observed, proceed to the next step. When malfunction is eliminated, further repair work is not required.

To repair the SRS "AIR BAG", perform the following steps:

When SRS is activated in a collision:

① Remove the air bag module.
② Remove the steering wheel assembly.
③ Check the spiral cable using the table shown below:
- If the spiral cable shows any visible damage such as dents, cracks, or deformation, replace it with a new one.

④ Install new steering wheel assembly.
⑤ Install new air bag module.
⑥ Conduct self-diagnosis using "AIR BAG" warning lamp to ensure that entire SRS operates properly. Refer to RS-43 for details.

When SRS is not activated in a collision:

① Check the SRS components using the table shown below:
- If the SRS components show any visible damage such as dents, cracks, or deformation, replace them with new ones.

② Conduct self-diagnosis using "AIR BAG" warning lamp to ensure that entire SRS operates properly. Refer to RS-43 for details.

SRS inspection

Part	SRS is activated	SRS is NOT activated
Air bag module	REPLACE Install with new bolts.	1. Remove air bag module. Check harness cover and connectors for damage, terminals for deformities, and harness for binding. 2. Install air bag module into the steering wheel to check fit and alignment with the wheel. 3. No damage found, reinstall with new bolts. 4. If damaged—REPLACE. Air bag must be deployed before discarding.
Steering wheel assembly (including diagnosis sensor unit).	REPLACE	1. Visually check steering wheel for deformities. 2. Check harness and connectors for damage, and terminals for deformities. 3. Check diagnosis sensor unit for dents, cracks or deformities. **Do not remove diagnosis sensor unit from steering wheel.** 4. Install air bag module to check fit or alignment with steering wheel. 5. If no damage is found, reinstall the steering wheel assembly. 6. If damaged—REPLACE.
Spiral cable	1. Check spiral cable for dents, cracks or deformities. 2. Check connectors and protective tape for damage. 3. Check steering wheel for noise, binding or heavy operation. 4. If no damage is found, reinstall with new bolts. 5. If damaged—REPLACE.	
Harness and Connectors	1. Check connectors for poor connection, damage, and terminals for deformities. 2. Check harness for binding, chafing, cuts, or deformities. 3. If no damage is found, reinstall the harness and connectors. 4. Damaged—REPLACE damaged section of harness. Do not attempt to repair, splice or modify any SRS harness.	

Before replacing "SRS" seat belt pre-tensioner, check if seat belt pre-tensioner is activated or not as follows.

Seat belt can be pulled — Seat belt pre-tensioner is not activated.

① Visually check seat belt assemblies including seat belt retractors attached hardware (i.e., guide rail set) for damage.
② If no damage is found, reinstall.
③ If damaged, install a new seat belt pre-tensioner assembly.

Seat belt cannot be pulled — Seat belt pre-tensioner is activated.

- **Replace with a new seat belt pre-tensioner assembly.**